James Hardie

Stucco Solution

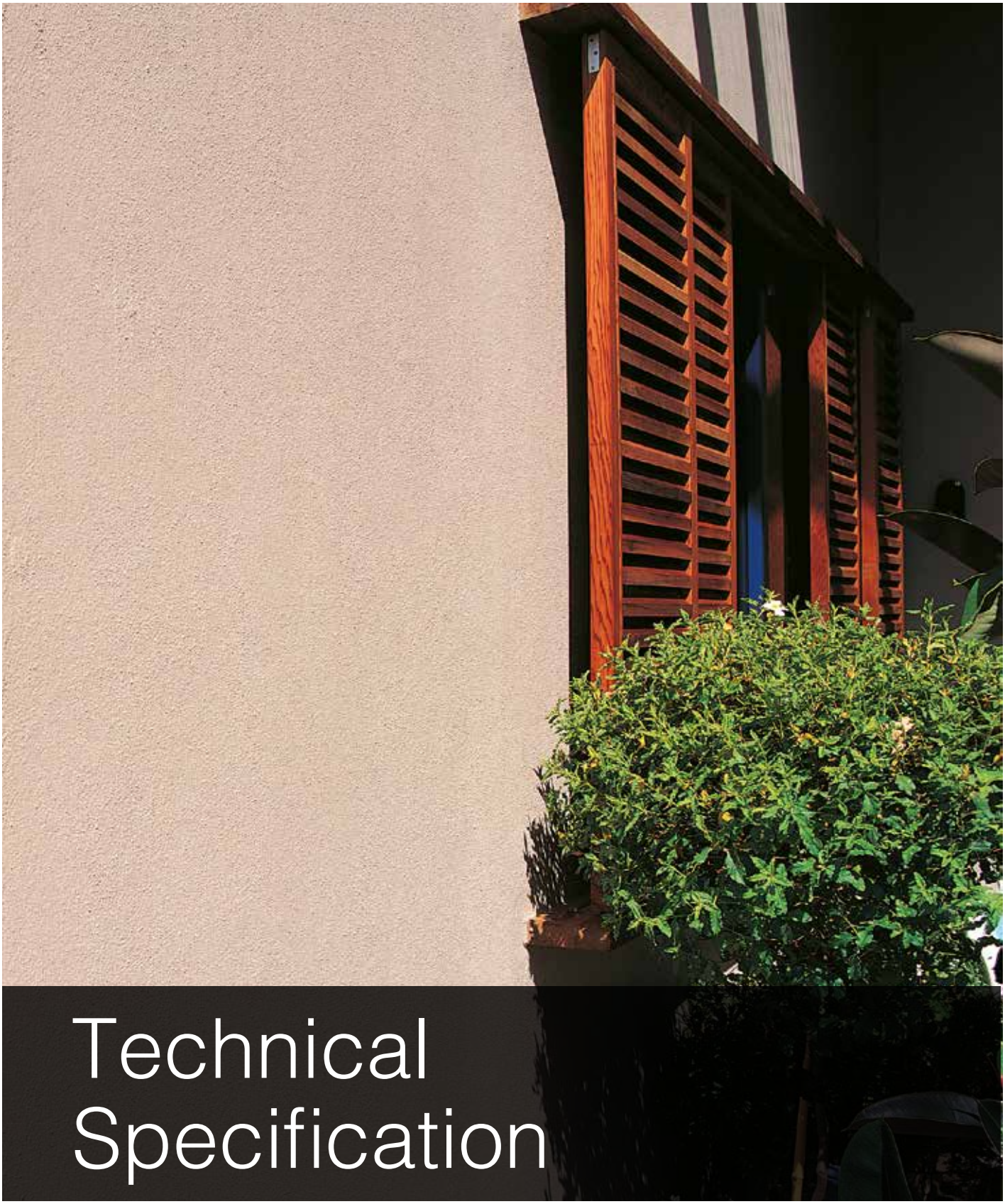

Technical Specification

MAY 2015 | NEW ZEALAND

Contents

WE VALUE YOUR FEEDBACK

To continue with the development of our products and systems, we value your input. Please send any suggestions, including your name, contact details, and relevant sketches to:

Ask James Hardie™
Fax 0800 808 988
literaturefeedback@jameshardie.co.nz

1 Application and scope

1.1 APPLICATION

HomeRAB™ Pre-Cladding substrate sheet as per this specification can be used as a rigid backing board for the application of stucco plasters.

If you are a specifier
Or other responsible party for a project ensure that the information in this document is appropriate for the application you are planning and that you undertake specific design and detailing for areas which fall outside the scope of these specifications.

If you are an installer
Ensure that you follow the design, moisture management and associated details and material selection provided by the designer. All the details provided in this document must be read in conjunction with the specifier's specification.

Make sure your information is up to date
When specifying or installing James Hardie products, ensure you have the current manual. If you're not sure you do, or, if you need more information, visit www.jameshardie.co.nz or Ask James Hardie on 0800 808 868.

1.2 SCOPE

This specification covers the use of HomeRAB Pre-Cladding substrate sheet as a rigid backing for stucco plasters using cavity construction method for buildings which fall within the scope of the New Zealand Building Code (NZBC) Acceptable Solution 'E2/AS1'.

Refer 'E2/AS1' for further information regarding the cavity construction method for stucco claddings.

1.3 DETAILS

Various HomeRAB Pre-Cladding substrate sheet details are provided in the Details section of this document. All dimensions shown are in millimetres unless noted otherwise. This specification and details in CAD file are also available to download from our website at www.jameshardie.co.nz.

1.4 SPECIFIC DESIGN

For use of HomeRAB Pre-Cladding substrate sheet outside the published scope, the architect, designer or engineer must undertake specific design. For advice on designs outside the scope of this specification, Ask James Hardie on 0800 808 868.

2 Design

2.1 COMPLIANCE

HomeRAB Pre-Cladding substrate sheet complies with section 9.3.6.2 of 'E2/AS1'. Information contained in this document is aligned with the requirements of the NZBC Acceptable Solution 'E2/AS1'.

2.2 RESPONSIBILITY

This document is not a substitute for any acceptable solution of the NZBC or any New Zealand standard. The specifier / designer responsible for the project design must ensure that the details provided in this specification are appropriate for the intended application and that additional detailing is provided for specific design projects or any areas that fall outside the scope of this specification. The designer must ensure that the intent of their design meets the requirements of the NZBC. All dimensions shown are in millimeters unless noted otherwise. All New Zealand Standards referenced in this manual are current edition and must be complied with. The specifier / designer are also to ensure that the standards and other reference documents referred to at the time of construction are current and valid.

James Hardie conducts stringent quality checks to ensure that any product manufactured falls within our quality spectrum. It is the responsibility of the builder to ensure that the product meets aesthetic requirements before installation. James Hardie will not be responsible for rectifying obvious aesthetic surface variations following installation.

2.3 SITE AND FOUNDATION

The site on which the building is situated must comply with the NZBC Acceptable Solution E1/AS1 'Surface Water'.

The timber framing of external walls for buildings using stucco cladding shall be supported on a concrete slab on ground continuous reinforced concrete foundation wall or reinforced concrete masonry foundation wall. The grade of adjacent finished ground must slope away from the building to avoid any possibility of water accumulation in accordance with the NZBC requirements.

2.4 SURFACE CLEARANCES

The clearances between the bottom edge of cladding and paved/unpaved ground must comply with section 9.1.3 of 'E2/AS1'. The finished floor level must also comply with these requirements. These cleances must be maintained throughout the life of the building.

HomeRAB Pre-Cladding substrate sheet must overhang the bottom plate on a concrete slab by a minimum of 50mm as required by the NZBC E2/AS1.

HomeRAB Pre-Cladding substrate sheet must have a minimum clearance of 100mm from paved ground and 150mm from unpaved ground.

On the roofs and decks the minimum clearance must be 50mm.

Do not install external cladding such that it may remain in contact with water or ground.

2.5 MOISTURE MANAGEMENT

It is the responsibility of the specifier to identify moisture related risks associated with any particular building design.

Wall construction design must effectively manage moisture, accounting for both the interior and exterior environments of the building, particularly in buildings that have a higher risk of wind driven rain penetration or that are artificially heated or cooled.

Walls shall include those provisions as required by the NZBC Acceptable Solution 'E2/AS1' 'External Moisture'. In addition all wall openings, penetrations, junctions, connections, window sills, heads and jambs must incorporate appropriate flashing and waterproofing. Materials, components and their installation that are used to manage moisture in framed wall construction must, at a minimum, comply with the requirements of relevant standards and the NZBC. For further information in relation to designing for weathertightness, refer to BRANZ Ltd and the Ministry of Business Innovation and Employment updates on the following websites, respectively www.branz.co.nz and www.dbh.govt.nz.

2.6 STRUCTURE

Timber-framing of external walls of buildings to be clad with stucco plasters shall comply with the NZS 3604 (Timber Framed Buildings) and the NZS 4251. When framing is provided as per a specific engineering design then the framing stiffness must be equivalent to or more than the minimum stiffness provisions of the NZS 3604.

2.7 WIND LOADING

HomeRAB Pre-Cladding substrate sheet is suitable for use in all wind zones (including and up to EH) in New Zealand as defined by NZS 3604.

A specific design is required for all situations where buildings fall in a specific engineering design (SED) wind zone.

2.8 STRUCTURAL BRACING

For structural bracing HardieFlex™ Sheet 6mm or RAB® Board may be used.

Refer to the James Hardie Bracing Design Manual for details.

2.9 FIRE RATED WALLS

For fire rating of up to 60 minutes HardieFlex Sheet or RAB Board may be used.

Refer to the Fire and Acoustic Design Manual for details.

2.10 ENERGY EFFICIENCY

External walls constructed using HomeRAB Pre-Cladding substrate sheet, bulk insulation, where the area of glazing is 30% or less of the total wall area and constructed as per this technical specification complies with the requirements for walls in the NZBC Acceptable Solution H1/AS1 (NZBC Clause H1 Energy Efficiency), Replacement Table 1. To meet thermal insulation requirements for the construction, the bulk insulation as specified in Table 1 must be used. This insulation may be substituted with insulations having higher R-values. The thermal insulation of a wall gets affected when the depth of the timber framing is increased or decreased. The calculation used in Table 1 is based on a timber framing size 90 x 45mm and using an internal lining material such as Villaboard™ Lining or a 10mm plasterboard.

Table 1

Insulation capability		
Climate Zone	**Construction R-Value Requirement**	**Minimum R-Value of Insulation Required**
1 and 2	1.9 m^2 ºC/W	#R2.0
3	2.0 m^2 ºC/W	#R2.2

Total construction R-Value depends on the insulation material used and the framing ratio. The insulation material R-Values specified in this table are for studs spaced at 600mm c/c and nogs spaced at 800mm c/c.

To achieve higher R-Values of construction the wall insulation material must be replaced with an insulation material having higher R-Values to suit the requirements.

For further guidance on insulation requirement refer to current edition of 'House Insulation Guide' published by BRANZ.

3 Framing

3.1 GENERAL

This HomeRAB Pre-Cladding substrate sheet technical specification is only suitable for timber-framed buildings. Other framing materials are outside the scope of this specification.

3.2 DIMENSIONS

A 45mm (nominal) minimum stud width is required at all sheet edges. A 35mm wide stud width may be used as intermediate studs.

3.3 TIMBER GRADE

Timber must be graded in accordance with the NZS 3631 'New Zealand Timber Grading Rules'. The timber grade to be used must be in accordance with the NZS 3604 requirements.

3.4 DURABILITY

The external framing must be treated to a minimum H1.2 treatment. Refer to the NZBC Acceptable Solution B2/AS1 'Durability' for further information about the durability requirements.

For timber treatment and allowable moisture content information refer to NZS 3602 (Timber and Wood-Based Products for use in Buildings) and NZS 3640 (Chemical Preservation of Round Sawn Timber) for minimum timber treatment selection and treatment requirements. Also refer to the framing manufacturer's literature for further guidance on timber selection.

Framing must be protected from moisture at sites in accordance with the recommendations of framing manufacturers.

3.5 FRAME CONSTRUCTION

All edges of HomeRAB Pre-Cladding substrate sheet must be fully supported by the framing. Framing must be rigid and not rely on the HomeRAB Pre-Cladding substrate sheet for stability.

Use of timber framing must be in accordance with framing manufacturers' specifications.

- All timber framing sizes and set-out must comply with NZS 3604, and with framing centres and timber widths required by this specification.
- Studs must be provided at 600mm centers max.
- Nogs/Dwangs must be provided at 800mm centers max.

For specific engineering design for timber framing refer to the NZS 3603 and AS/NZS 1170.

3.6 SPECIAL FRAMING REQUIREMENTS

- An extra stud is required at internal corners.
- James Hardie recommends that the timber frame set-out is predetermined to suit HomeRAB Pre-Cladding substrate sheet to ensure minimum cutting and wastage.

3.7 TOLERANCES

In order to achieve an acceptable wall finish, it is imperative that framing is straight and true. Framing tolerances must comply with the requirements of the NZS 3604. All framing shall be made flush.

4 Preparation

4.1 BUILDING UNDERLAY / HOMERAB PRE-CLADDING

Building underlay/HomeRAB Pre-Cladding must be provided as per the requirements of the NZBC Acceptable Solution 'E2/AS1' 'External Moisture' and the NZS 3604. The building underlay must comply with Table 23 of 'E2/AS1'.

The building underlays must be fixed in accordance with 'E2/AS1', NZS 3604 and the underlay manufacturer's recommendations.

Walls which are not lined on the inside face e.g. garage walls or gable ends must include a rigid sheathing or an air barrier behind the cladding which complies with Table 23 of E2/AS1.

James Hardie HomeRAB Pre-Cladding complies with these requirements and is suitable for use in this situation. It must be installed in accordance with the James Hardie Rigid Air Barriers installation manual.

4.2 RAB BOARD

General building underlay or HomeRAB Pre-Cladding is suitable for use up to very high wind zone (50m/sec).

For specific design projects where the wind pressure is higher than 1.5kPa, or when an EH wind zone, James Hardie RAB Board must be used instead of building underlay.

To achieve the temporary weathertightness using James Hardie rigid air barriers, windows/doors can be temporarily installed. Refer to James Hardie Rigid Air Barriers installation manual for information regarding its installation.

4.3 VENT STRIP

The James Hardie uPVC cavity vent strip must be installed at the bottom of all walls constructed using the drained and ventilated cavity construction method. It is important that the openings in the vent strip are kept clear and unobstructed to allow free drainage and ventilation of cavities. The James Hardie uPVC cavity vent strip has an opening area of 1000mm^2/m length.

4.4 CAVITY BATTENS

Cavity battens are fixed onto the building underlay on the framing to create a cavity behind the substrate.

The cavity battens provide airspace between the frame and the sheet and are considered a 'packer' only in this specification.

The timber battens must be minimum H3.1 treated in accordance with the NZS 3640 (Chemical preservation of rough and sawn timber) to comply with the durability requirements of B2/AS1.

Cavity battens must comply with following requirements

- be minimum 18mm thick.
- be minimum as wide as the width of studs.
- when studs are at 600mm centres battens to be provided at 300mm centres.
- be fixed by the cladding fixings to the main framing under the building underlay.
- until claddings are fixed the battens only need to be tacked to the framing.

(Note: Batten fixing is required temporarily to keep them straight on the wall during construction.)

No intermediate batten between studs is required:

- when studs are spaced at maximum 400mm centres and
- when rigid sheathings instead of building underlays are used.

(Note: 100 mm long cavity packers must be used where required to support sheet fixings in this circumstance.)

The battens must be fixed to the studs with 40 x 2.8mm nails at 800mm centres maximum, small packers are required on nogs, as well as top and bottom plates to facilitate the fixing of reinforcing mesh.

4.4 JUNCTIONS AND PENETRATIONS

Refer to Clause 2.5 of this literature for moisture management requirements. All windows and doors must be detailed as per the requirements of the NZBC Acceptable Solution 'E2/AS1' 'External Moisture'. Also refer to joinery manufacturers / suppliers for installation information. Refer to Figures 10 to 12 for window penetrations. Also refer to section 9.1.9.3 of 'E2/AS1' for further information regarding the treatment of window penetrations. Pipes and service penetrations shall be made weathertight by using appropriate flashings and sealants. Refer to 'E2/AS1' for further information. Also refer to joinery manufacturer / provider for detailed information regarding window installation.

5 Fixing HomeRAB Pre-Cladding substrate sheet

5.1 GENERAL

The HomeRAB Pre-Cladding substrate sheet must be kept dry and under cover whilst in storage and must be dry at the time of installation. Framing moisture must not exceed a maximum 24% prior to sheet installation. Every endeavour must be made to keep framing dry once sheet fixing commences.

5.2 FASTENER — SIZE AND LAYOUT

HomeRAB Pre-Cladding substrate sheet must be nail-fixed to timber as described as follows:

- Use 60 x 3.15mm HardieFlex™ fibre cement nails.
- Nails at 200mm centres on studs.
- Nails at 150mm centres on top plate and bottom plate.
- Nails must be driven a minimum of 12mm from the sheet edges and 75mm minimum from corners.
- Nails must finish flush with sheet surface.

When using rigid air barrier like HomeRAB Pre-Cladding or RAB Board, the substrate fixing nails must be increased in length equal to the thickness of the rigid air barrier.

5.3 GUN NAILING

HomeRAB Pre-Cladding substrate sheet can be fixed using nail guns. The gun nails used must have a full round head to provide the required holding power. The length and gauge of nails must be a minimum as specified in this document. Check with nail gun manufacturer for more information.

Note: Do not use D Head nails.

5.4 FASTENER DURABILITY

Fasteners must meet the minimum durability requirements of the NZBC. NZS 3604 specifies the requirements for fixing's material to be used in relation to the exposure conditions and are summarised in Table 2.

Table 2

Exposure conditions and nail selection prescribed by NZS 3604		
Nail Material		
D Zone *	Zone C outside sea spray zone and Zone B and Geothermal hot spots	Bracing — All zones
Grade 316 Stainless	Hot-dipped galvanised or 316 stainless	Grade 316 stainless

* *(Zone C areas where local knowledge dictates that increased durability is required, appropriate selection shall be made)*

Micro-climate conditions as detailed in NZS 3604, paragraph 4.2.4 require SED

Also refer to the NZBC Acceptable Solution 'E2/AS1' Table 20 and 21 for information regarding the selection of suitable fixing materials and their compatibility with other materials.

5.5 SHEET LAYOUT

- All sheet edges must be supported by the framing.
- HomeRAB Pre-Cladding substrate sheet must be fixed vertically.

5.6 VERTICAL SHEET JOINT

Provide 2-3mm gap between HomeRAB Pre-Cladding substrate sheet at vertical sheet joints and internal and external corners.

6 Stucco Plaster Jointing and Finishing

Refer to the NZS 4251 for detailed information and application of stucco plaster.

6.1 SLIP LAYER

Building underlay over the face of HomeRAB Pre-Cladding substrate sheet must be fixed before fixing reinforcing mesh and application of plaster to comply with section 9.3.3 (b) of 'E2/AS1'.

The building underlay must be run horizontally and lapped 75mm at joints, with the direction lap ensuring water is shed to the outer face of the underlay.

6.2 BASE MOULD

A uPVC stucco base mould is available from James Hardie to finish the plaster against. Fix the base mould to the bottom plate over the HomeRAB Pre-Cladding substrate sheet before plastering commences. The up-stand of the base mould must be lapped under the building paper. Refer Figure 4.

6.3 REINFORCEMENTS

Fix reinforcement for stucco plaster in accordance with the NZS 3604 and the NZS 4251 'Solid Plaster'. The mesh must be spaced in the plaster between 6mm and 9mm from the HomeRAB Pre-Cladding substrate sheet surface. To achieve this spacing and adequately tightening the mesh, use the uPVC stucco spacer angle.

The uPVC stucco spacer angle is fixed in a continuous strip vertically down each stud line at 600mm centres. The 150mm spacers are fixed to the centre of each nog line. Fix to reference marks previously set out on the building paper face as all mesh fixings must penetrate the timber frame. Use 50 x 2.8mm flat head nail, to fix the reinforcing mesh. Nail through or alongside every fourth hole (150mm spacing) in the spacers down each stud line and nail-fix the mesh at 150mm along the nogs. Slightly skew the nail from centre of the sheet outwards to make taut. For further information about stucco reinforcement refer to section 4.3 of the NZS 4251.

6.4 STUCCO VERTICAL CONTROL JOINT

Control joints are required to take up any shrinkage or movement of the stucco plaster finish. Refer Figure 6.

A vertical control joint must be provided at 4 metres maximum centres as required under the NZS 4251. Also refer to 'Weathertight Solution Volume –2' (2004) a book published by BRANZ for further information.

- At all internal and external corners the mesh and plaster is to be continuous around the corners, control joints are not required.
- Control joints must be located at 2m maximum from the corners.
- When a window or door opening is in the vicinity of the control joint then the edge of the opening is an ideal location for the control joint.
- When the width of an opening is more than 2m, a control joint must be provided on either side of opening. Where window opening is less than 2m wide, a control joint must be provided on one side of opening. For further information refer NZS 4251.
- Control joints shall all be formed to coincide with locations and joints in a structure where structural movement is likely to occur.
- As a good practice, position the control joints so they are hidden by the building features where possible.
- The vertical HomeRAB Pre-Cladding substrate sheet joints are not required to coincide with stucco plaster control joints.

6.5 HORIZONTAL CONTROL JOINT

At floor joist levels and wall frame to truss connections a horizontal joint must be provided to accommodate the movements resulting due to timber joist shrinkage or settlement.

Horizontal control joint must be located at 4 metres maximum as required under the NZS 4251.

A cavity needs to be drained out to the exterior after every two floor levels as per the requirements of the NZBC Acceptable Solution 'E2/AS1' clause 9.1.9.4. To achieve this, a purpose made metal 'Z' flashing must be used to form a horizontal joint. Refer Figure 13. The metals which could be used are stainless steel, powder-coated aluminum, powder-coated hot dipped galvanised steel and hot dipped galvanised steel.

Zinc/aluminium uncoated steel is not suitable as it deteriorates in contact with portland cement.

Where draining to the exterior is not required the James Hardie uPVC 'h' mould is used to form a horizontal joint. Refer Figure 14.

6.6 EXPANSION JOINT

Expansion joints are provided to accommodate or allow structural movements. A vertical structural expansion joint must be provided at maximum 12 metres. They are generally required for larger commercial buildings only, and such buildings are outside the scope of this literature. Appropriate joint design shall be undertaken for this situation.

6.7 GABLE ENDS

Where the truss is sitting over the wall frame a horizontal control joint must be provided above the top plate. Additional framing must be provided in the gable frame to support HomeRAB Pre-Cladding substrate sheet installation.

Where a single stud continues from bottom plate to the underside of roof framing, no horizontal control joint is required where the stud height is equal to or less than 4000mm.

6.8 SEALANTS

Application and use of sealants must comply with manufacturer's instructions and be compatible with texture coating. Check with sealant manufacturer prior to coating over sealants. Some sealant manufacturers do not recommend coating over their product.

6.9 COATING

Painting of plaster is essential to meet the durability requirements of the NZBC and product warranty requirements.

- Seal the stucco surfaces by applying a minimum two coats of a quality exterior paint system complying with any of parts 7, 8, 9 or 10 of AS 3730.
- Before painting, remove any surface dirt, grime or other contaminants and ensure the plaster is dry.

In all cases the manufacturer's specification for the selected paint must be followed. Note that some paints require undercoat before applying the finish coat.

7 Finishing

7.1 STUCCO CLADDING SYSTEM

All stucco claddings shall be used over a drained cavity and must have a building underlay fixed to the framing and an overlay on HomeRAB Pre-Cladding substrate sheet to provide a slip layer that permits independent movements of plaster and the backing board. For further information about the code requirements, please refer to the NZBC Acceptable Solution 'E2/AS1' section 9.3. HomeRAB Pre-Cladding substrate sheet is a rigid backing for stucco plaster and proprietary plaster coatings and provides true straight backing to plaster. An approved plastering system is to be applied which meets the requirements of the NZBC and is in accordance with NZS 4251. Stucco plaster must be finished within 90 days after the installation of HomeRAB Pre-Cladding substrate sheet.

8 Storage and handling

HomeRAB Pre-Cladding substrate sheet must be laid flat on a smooth level surface. Edges and corners must be protected from chipping.

To ensure optimum performance, store panels under cover and keep dry prior to fixing. If the sheets should become wet, allow to dry thoroughly before fixing.

Do not carry HomeRAB Pre-Cladding substrate sheet on the flat, carry in the vertical position to avoid excessive bending.

9 Maintenance

It is the responsibility of the specifier to determine normal maintenance requirements to comply with Acceptable Solution B2/AS1. The extent and nature of maintenance will depend on the geographical location and exposure of the building.

As a guide, it is recommended that basic normal maintenance tasks shall include but not be limited to:

- Washing down exterior surfaces every 6-12 months*,
- Re-applying exterior protective finishes**,
- Maintaining the exterior envelope and connections including joints, penetrations, flashings and sealants that may provide a means of moisture entry beyond the exterior cladding to comply with the requirements of the NZBC clause E2.
- Cleaning out gutters, blocked pipes and overflows as required.
- Pruning back vegetation which is close to or touching the building.

**Do not use a water blaster to wash down the cladding.*
***Refer to your paint manufacturer for washing down and recoating requirements related to paint performance.*

10 Product information

10.1 MANUFACTURING AND CLASSIFICATION

HomeRAB Pre-Cladding substrate sheet is a cellulose fibre reinforced cement building product. The basic composition is portland cement, ground sand, cellulose fibre and water. HomeRAB Pre-Cladding substrate sheet is easily identified by the name 'HomeRAB Pre-Cladding' printed on front face at regular intervals.

HomeRAB Pre-Cladding substrate sheet is manufactured to the AS/NZS 2908.2 'Cellulose-Cement Products Part 2: Flat Sheets' (ISO 8336 'Fibre Cement Flat Sheets') in New Zealand. James Hardie New Zealand Limited is an ISO 9001 'Telarc' certified manufacturer.

HomeRAB Pre-Cladding substrate sheet is classified Type A, Category 3 in accordance with the AS/NZS 2908.2 'Cellulose-Cement Products'.

For Safety Data Sheets (SDS) visit www.jameshardie.co.nz or Ask James Hardie on 0800 808 868.

Available sizes of HomeRAB Pre-Cladding substrate sheet are provided in Table 3.

Table 3

HomeRAB Pre-Cladding substrate sheet sizes			
Thickness (mm)	**Width (mm)**	**Length (mm)**	**Code**
4.5	1200	2450	**404766**
		2750	**404768**

HomeRAB Pre-Cladding substrate sheet has a mass on 6.9kg/m^2 at EMC.

10.2 DURABILITY

HomeRAB Pre-Cladding substrate sheet, when installed and maintained as per the technical specification, will meet the durability requirements for claddings as required in the NZBC Approved Document B2 'Durability'.

10.2.1 RESISTANCE TO MOISTURE/ ROTTING

HomeRAB Pre-Cladding substrate sheet is resistant to permanent moisture-induced deterioration (rotting) by meeting the requirements of the following tests in accordance with AS/NZS 2908.2:

- Water Permeability (Clause 8.2.2)
- Warm Water (Clause 8.2.4)
- Heat Rain (Clause 6.5)
- Soak Dry (Clause 8.2.5).

10.2.2 ALPINE REGIONS

In regions subject to freeze/thaw conditions, HomeRAB Pre-Cladding substrate sheet must not be in direct contact with snow or ice build up for extended periods, e.g. external walls in alpine regions must be protected where snow drifts over winter is expected.

The HomeRAB Pre-Cladding substrate sheet meets the requirements of the AS/NZS 2908.2 Clause 8.2.3.

11 Safe working practices

WARNING — DO NOT BREATHE DUST AND CUT ONLY IN WELL VENTILATED AREA

James Hardie products contain sand, a source of respirable crystalline silica which is considered by some international authorities to be a cause of cancer from some occupational sources. Breathing excessive amounts of respirable silica dust can also cause a disabling and potentially fatal lung disease called silicosis, and has been linked with other diseases. Some studies suggest smoking may increase these risks. During installation or handling: (1) work in outdoor areas with ample ventilation; (2) minimise dust when cutting by using either 'Score and Snap' knife, fibre cement shears or, where not feasible, use a HardieBlade™ Saw Blade and dust-reducing circular saw attached to a HEPA vacuum; (3) warn others in the immediate area to avoid breathing dust; (4) wear a properly-fitted, approved dust mask or respirator (e.g. P1 or P2) in accordance with applicable government regulations and manufacturer instructions to further limit respirable silica exposures. During clean-up, use HEPA vacuums or wet cleanup methods — never dry sweep. For further information, refer to our installation instructions and Safety Data Sheets available at www.jameshardie.co.nz.

FAILURE TO ADHERE TO OUR WARNINGS, SAFETY DATA SHEETS, AND INSTALLATION INSTRUCTIONS MAY LEAD TO SERIOUS PERSONAL INJURY OR DEATH.

James Hardie recommended safe working practices

CUTTING OUTDOORS

1. Position cutting station so that wind will blow dust away from user or others in working area.
2. Use one of the following methods based on the required cutting rate:

BEST
- Score and snap
- Hand guillotine
- Fibreshear

BETTER
- Dust reducing circular saw equipped with HardieBlade™ Saw Blade and HEPA vacuum extraction.

GOOD
- Dust reducing circular saw equipped with HardieBlade™ Saw Blade

CUTTING INDOORS

- Cut only using score and snap, hand guillotine or fibreshears (manual, electric or pneumatic).
- Position cutting station in well-ventilated area

DRILLING/OTHER MACHINING

When drilling or machining you should always wear a P1 or P2 dust mask and warn others in the immediate area.

IMPORTANT NOTES

1. For maximum protection (lowest respirable dust production), James Hardie recommends always using "Best" — level cutting methods where feasible
2. NEVER use a power saw indoors
3. NEVER use a circular saw blade that does not carry the HardieBlade™ logo
4. NEVER dry sweep — Use wet suppression or HEPA Vacuum
5. NEVER use grinders
6. ALWAYS follow tool manufacturer's safety recommendations

P1 or P2 respirators can be used in conjunction with above cutting practices to further reduce dust exposures. Additional exposure information is available at www.jameshardie.co.nz to help you determine the most appropriate cutting method for your job requirements. If concern still exists about exposure levels or you do not comply with the above practices, you should always consult a qualified industrial hygienist or contact James Hardie for further information.

Working instructions

Refer to recommended Safe Working Practices before starting any cutting or machining of product.

Score and snap

Score and Snap is a fast and efficient method of cutting the product using special tungsten tipped Score and Snap knife.

Preferably score on the face side of the product. Score against a straight edge and repeat the action to obtain adequate depth for clean break — normally 1/3 of sheet thickness. Snap upwards to achieve break. Smooth any rough edges with a rasp.

Hand guillotine

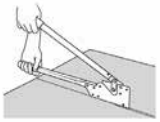

Make guillotine cut on the off-cut side of line to allow for the thickness of the blade.

Fibreshear heavy duty

An electrically powered, fast, clean and effortless way of cutting James Hardie building products, especially around curves such as archways. Make Fibreshear cut on the “off-cut” side of the line to allow for the thickness of the shear.

HardieBlade™ Saw Blade

The HardieBlade Saw Blade used with a dust-reducing saw connected to a HEPA vacuum is ideal for fast, clean cutting of James Hardie fibre cement products. A dust-reducing saw uses a dust deflector or a dust collector connected to a vacuum system. When sawing, clamp a straight-edge to the sheet as a guide and run the saw base plate along the straight edge when making the cut.

Hole-forming

For smooth clean cut circular holes:

Mark the centre of the hole on the sheet.
Pre-drill a ‘pilot’ hole.

Using the pilot hole as a guide, cut the hole to the appropriate diameter with a hole saw fitted to a heavy duty electric drill.

For irregular holes:

Small rectangular or circular holes can be cut by drilling a series of small holes around the perimeter of the hole then tapping out the waste piece from the sheet face. Tap carefully to avoid damage to sheets, ensuring that the sheet edges are properly supported.

Storage and handling

All James Hardie building products should be stored to avoid damage, with edges and corners of the sheets protected from chipping. James Hardie building products must be installed in a dry state and be protected from rain during transport and storage. The product must be laid flat under cover on a smooth level surface clear of the ground to avoid exposure to water or moisture, etc.

Quality

James Hardie conducts stringent quality checks to ensure that any product manufactured falls within our quality spectrum. It is the responsibility of the builder to ensure that the product meets aesthetic requirements before installation. James Hardie will not be responsible for rectifying obvious aesthetic surface variations following installation.

12 Accessories

Accessories/Tools supplied by James Hardie for HomeRAB Pre-Cladding substrate sheet on cavity				
	Accessory and material number		**Size (mm)**	**Material / appearance**
	6mm Horizontal Flashing	**302254**	3000 long	uPVC/Bone colour
	Vent Strip	**302490**	3000 long	uPVC
	Horizontal Flashing Jointer 180º	**301921**	100 long	uPVC/Bone colour
	Horizontal Flashing Jointer 90º	**301920**	50 x 50	uPVC/Bone colour
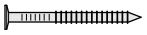	HardieFlex™ Nail - 5Kg	**302782**	60 x 3.15mm	316 Stainless Steel
	HardieFlex™ Nail - 5Kg	**302784**	60 x 3.15mm	Hot Dip Galvanised
	Stucco Base Moulding	**300658**	2700 long	uPVC White
	Stucco Control Joint Moulding	**300659**	2700 long	uPVC White
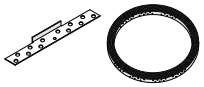	Stucco Spacer Angle	**300661**	50m roll and 150mm length	uPVC White
	HardieBlade™ Saw Blade	**300660**	4 tooth — 184mm	Diamond Tipped

Accessories not supplied by James Hardie for HomeRAB Pre-Cladding substrate sheet on cavity

James Hardie recommends the following products for use in conjunction with its HomeRAB Pre-Cladding substrate sheet. James Hardie does not supply these products. There may also be some other accessories required depending upon the application. Please contact component manufacturer for information on their warranties and further information on their products.

	Accessory and material number	**Size (mm)**	**Material/appearance**
	HardieFlex™ Nail	40 x 2.8mm	316 Stainless Steel
	HardieFlex™ Nail	40 x 2.8mm	Hot Dip Galvanised
	Flexible Sealant Sika Sikaflex AT-Facade	Tube	
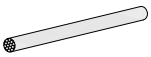	PEF Rod Sika Boom or similar	Polyethylene close cell foam Polyurethane expandable foam	
	Flashing Tape Tyvek, Protecto wrap or similar	Proprietary tape to adhere to building underlay	
	Flashing as per Table 20 'E2/AS1'	Refer Figure 13	Flashing fabricator
	Flat Head Nail for fixing spacer angle and mesh	50 x 2.8mm	Hot Dip Galvanised/ Stainless Steel
	Inseal 3109 Sealing Strip	19 x 10 x 12	Black compressible foam
	Reinforcing Mesh		Building Merchant to supply
	Flashing as per Table 20 'E2/AS1'	Refer Figure 10	Flashing Fabricator
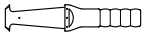	Scoring Knife		

13 Details

Various details outlined in the following table are available on Pages 14 to 25.

Table 7

Details		
Description	**Cavity construction**	**Page**
Framing and Batten Setout	Figure 1	15
Cavity Batten Fixing	Figure 2	16
Sheet Fixing	Figure 3	17
Concrete Footing	Figure 4	18
Control Joint Set Out	Figure 5	19
Vertical Stucco Control Joint	Figure 6	19
External Corner	Figure 7	20
Internal Corner	Figure 8	20
Soffit Detail	Figure 9	21
Window Sill	Figure 10	21
Window Head	Figure 11	22
Window Jamb	Figure 12	22
Horizontal Drainage Joint	Figure 13	23
Horizontal Control Joint	Figure 14	24
‘h’ Mould Joiner Connection	Figure 15	25
Stucco Spacer Angle Fixing	Figure 16	26

Figure 1: Cavity typical framing and batten setout

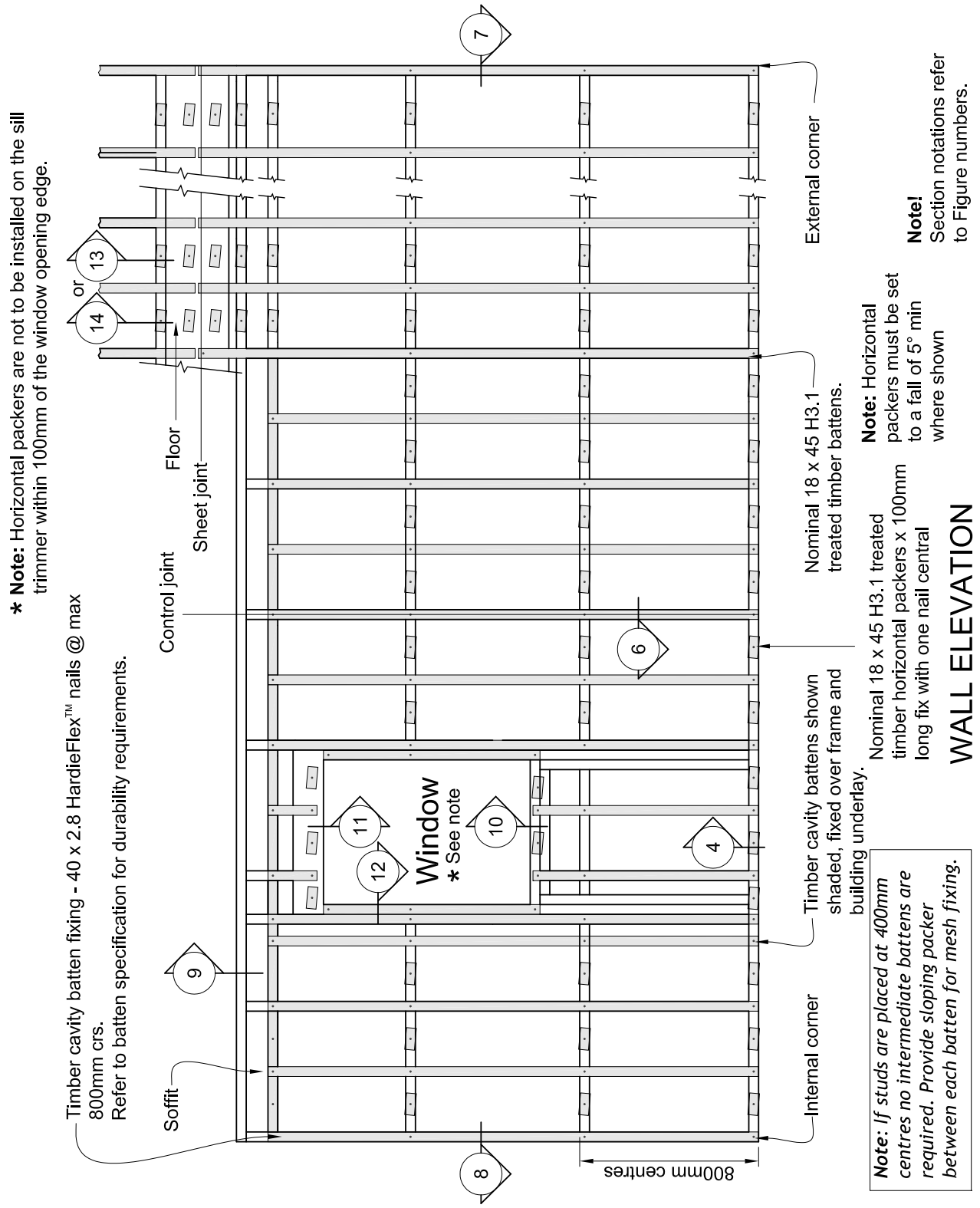

Figure 2: Cavity batten fixing

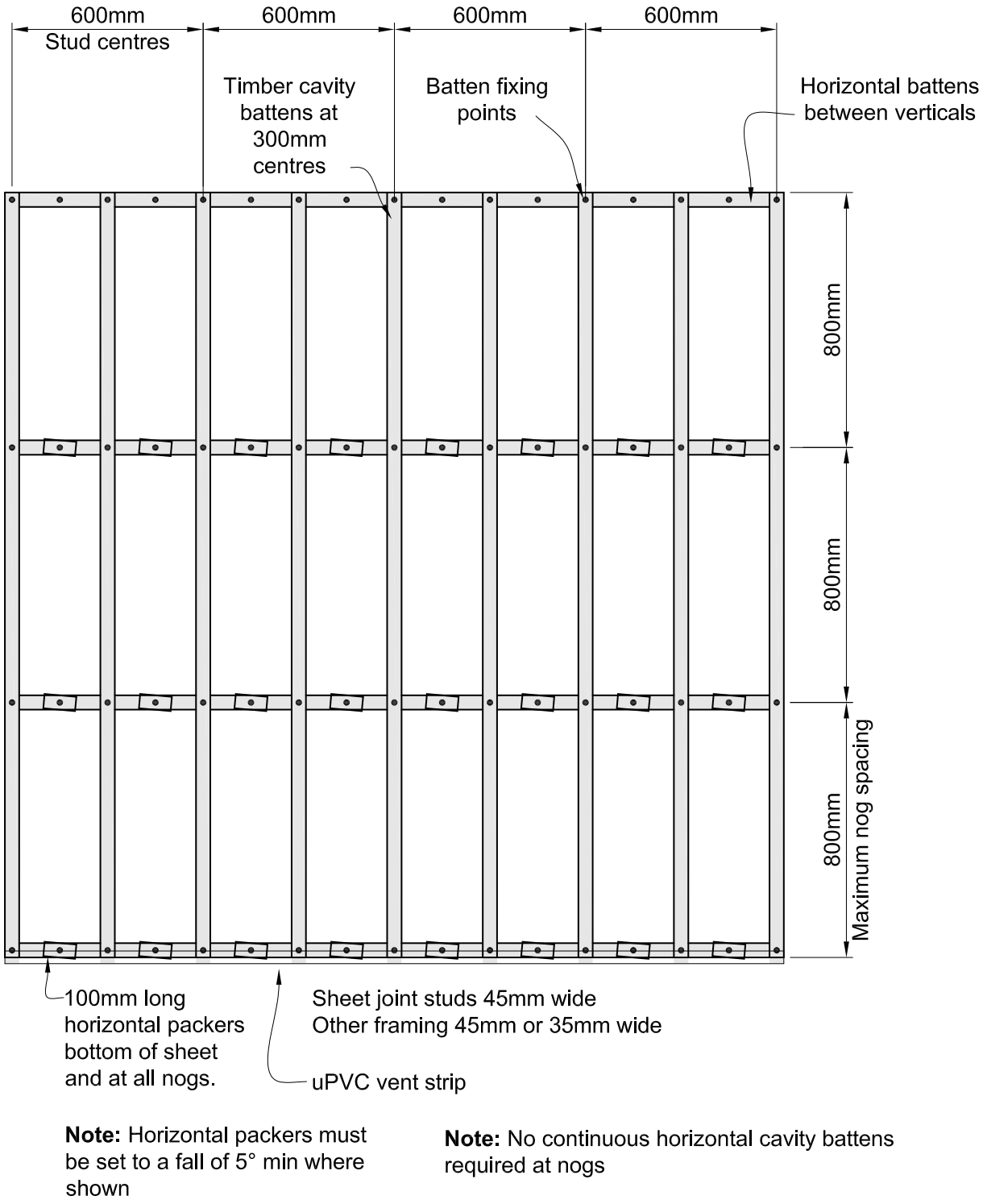

Note: Horizontal packers must be set to a fall of 5° min where shown

Note: No continuous horizontal cavity battens required at nogs

Figure 3: Typical sheet fixing setout

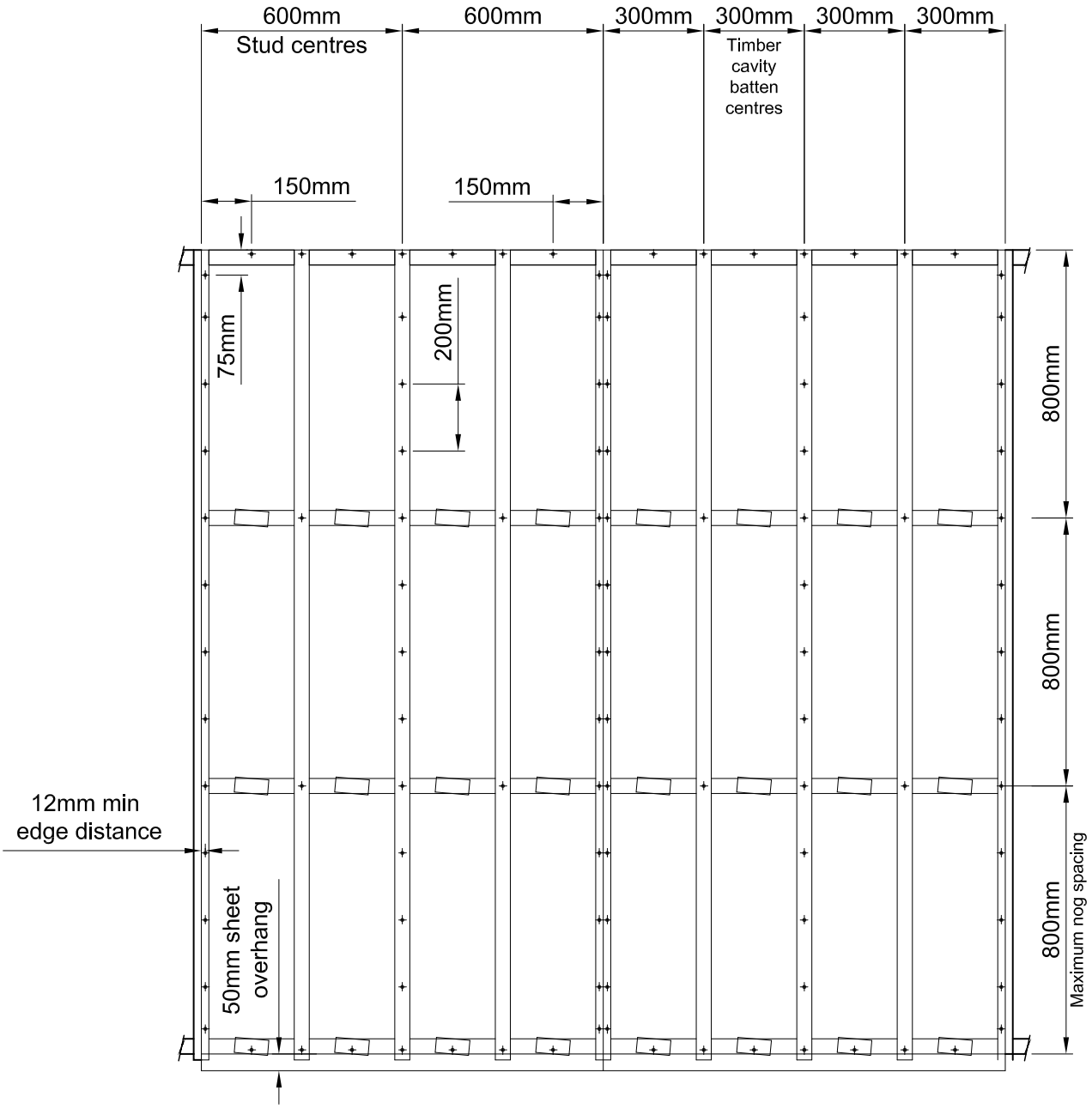

Note:
All horizontal packers must be set to a fall of 5° min

Note:
HomeRAB® Pre-Cladding substrate sheets must be fixed vertically.

Figure 4: Concrete footing

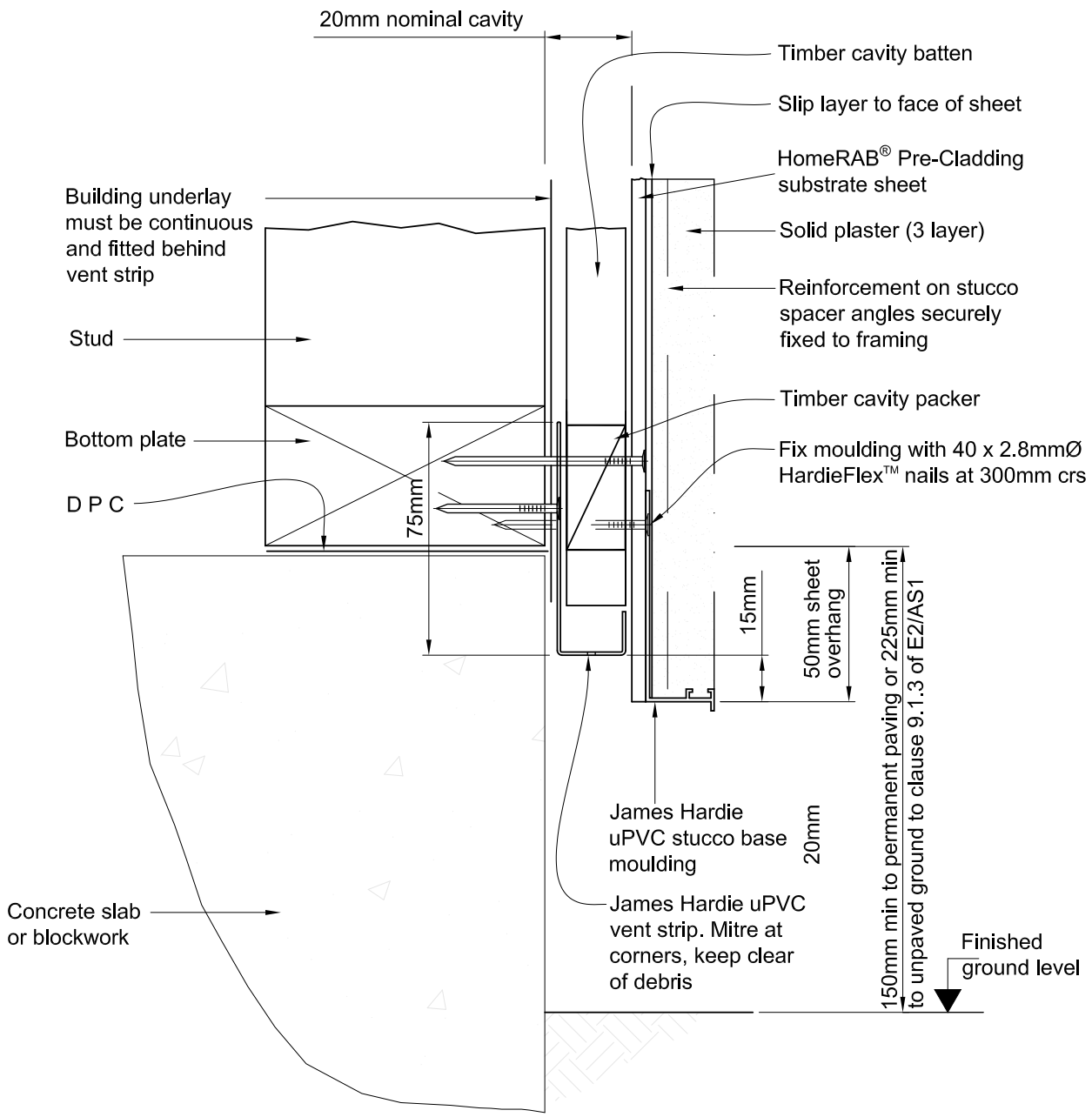

Figure 5: Stucco control joint setout

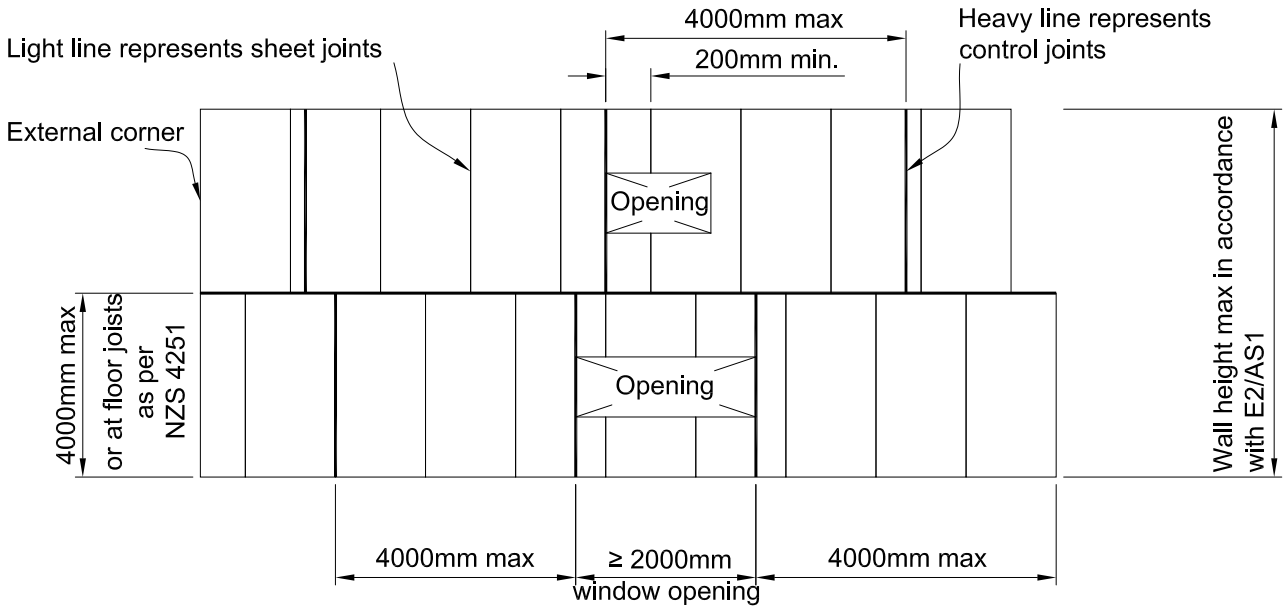

Figure 6: Vertical stucco control joint

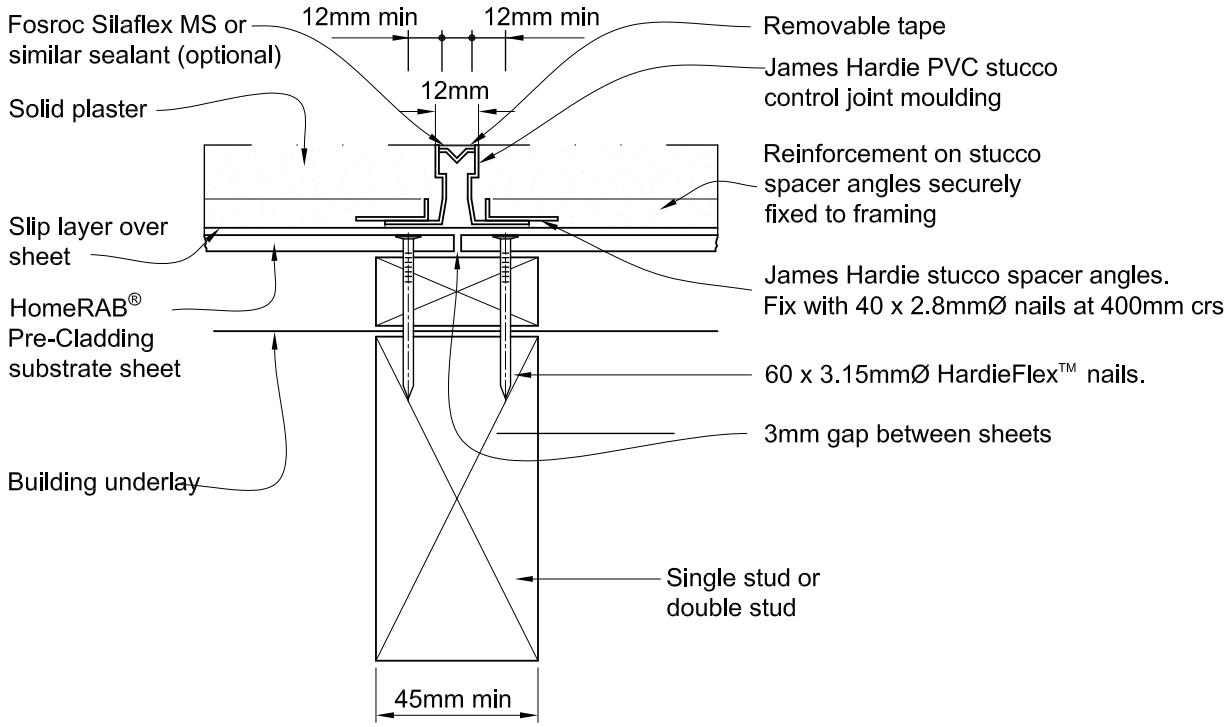

Note:
Sheet joint need not coincide with vertical control joint

Figure 7: External corner

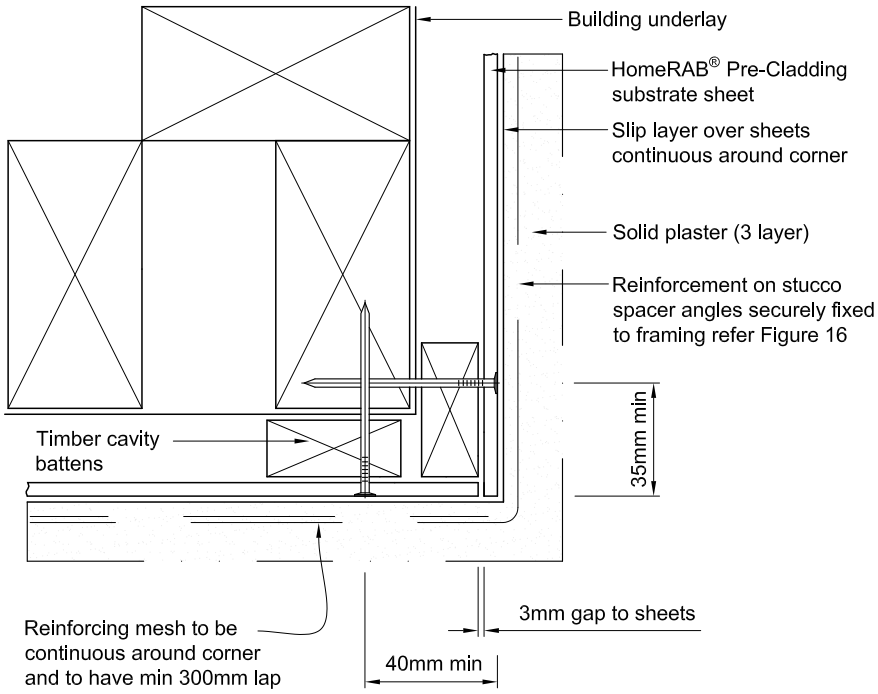

Figure 8: Internal corner

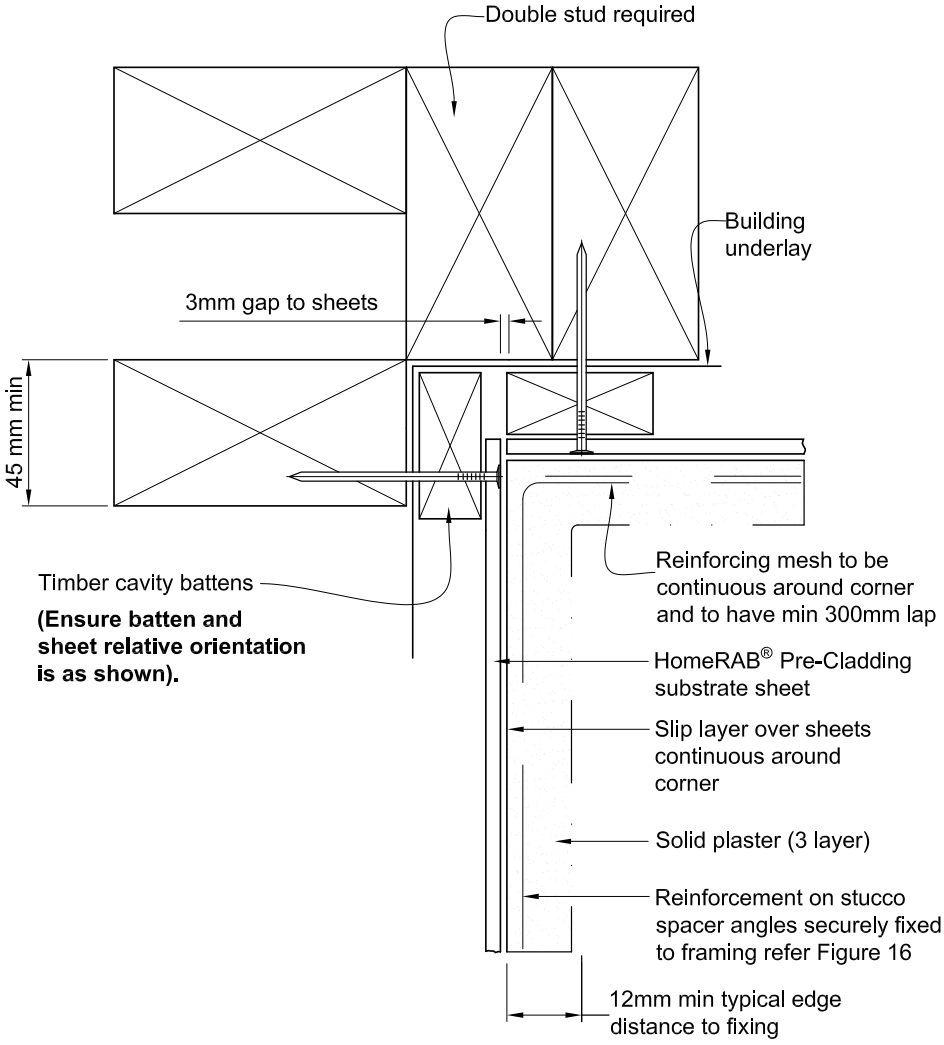

Figure 9: Soffit detail

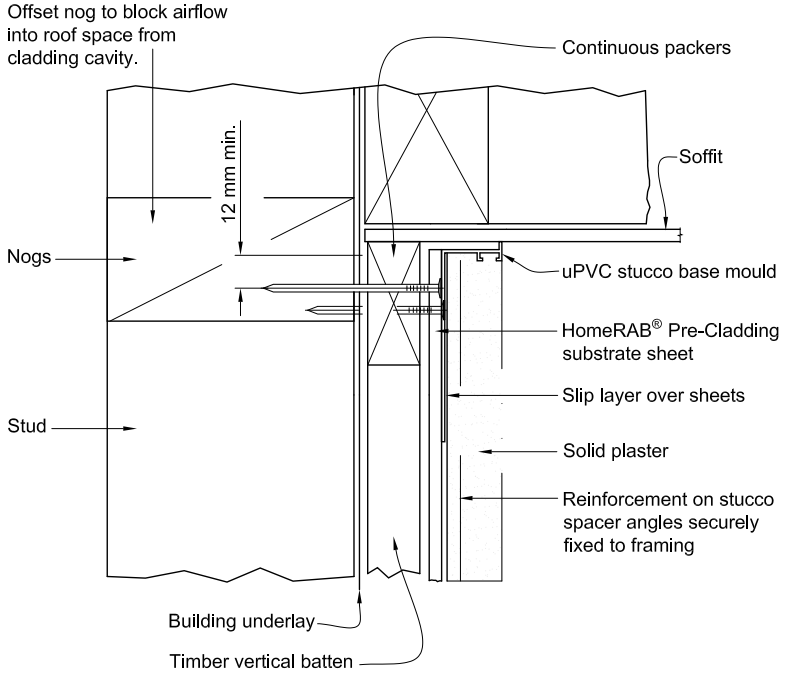

Figure 10: Window sill

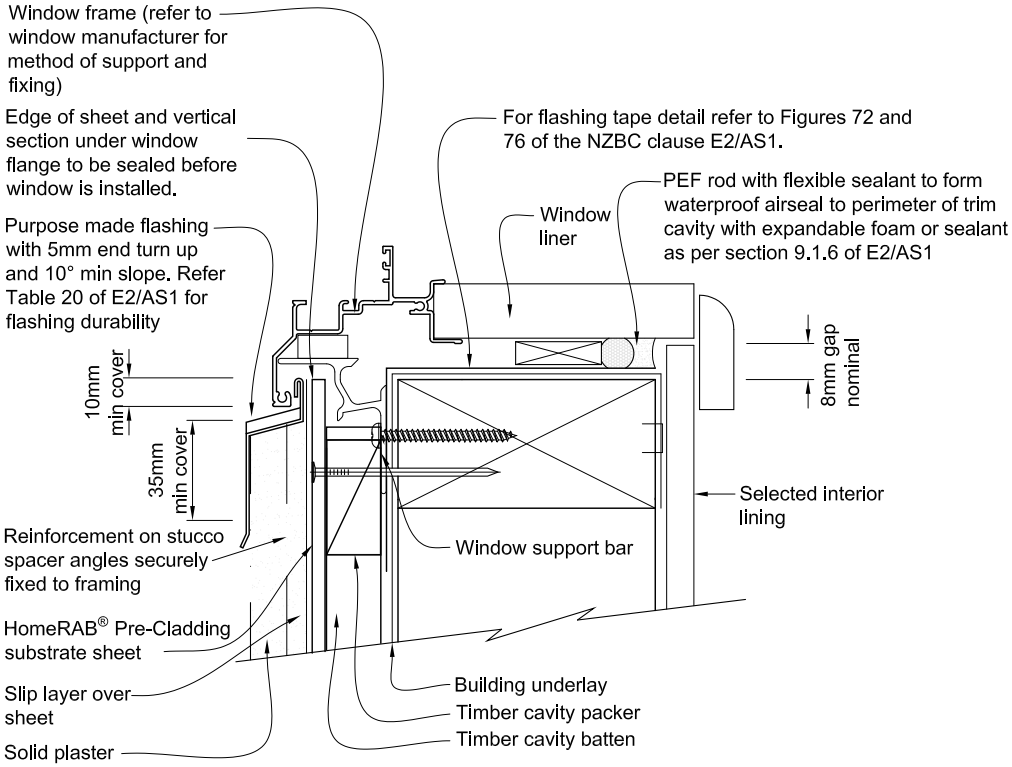

General notes for materials selection

1. Flashing materials must be selected based on environmental exposure, refer to the NZS 3604 Table 20 of the NZBC clause 'E2/AS1'.
2. Building underlay must comply with acceptable solution NZBC clause 'E2/AS1' and the NZS 3604.
3. Flashing tape must have proven compatibility with the selected building underlay and other materials with which it comes into contact as per Table 21 of the NZBC clause 'E2/AS1'.

(Refer to the manufacturer or supplier for technical information for these materials.)

Figure 11: Window head

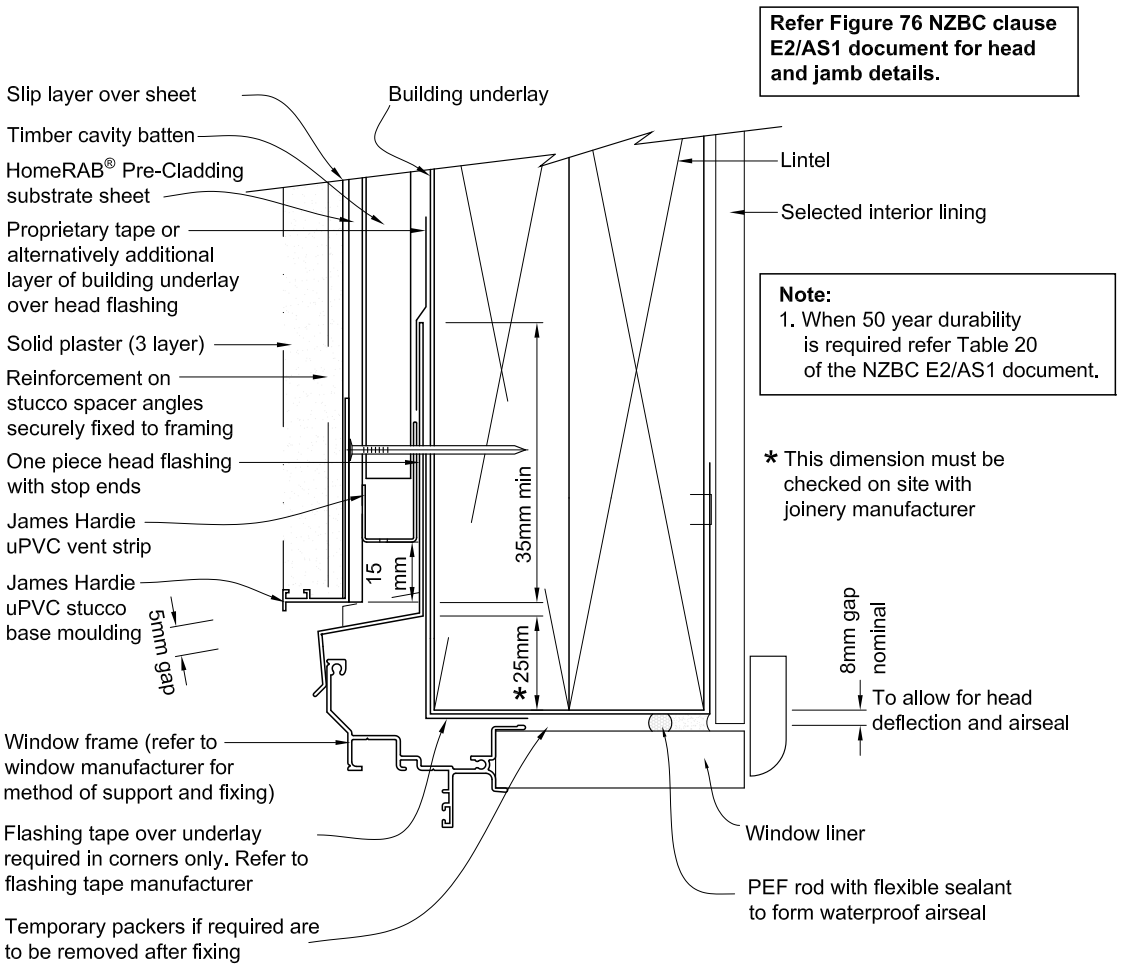

Figure 12: Window jamb

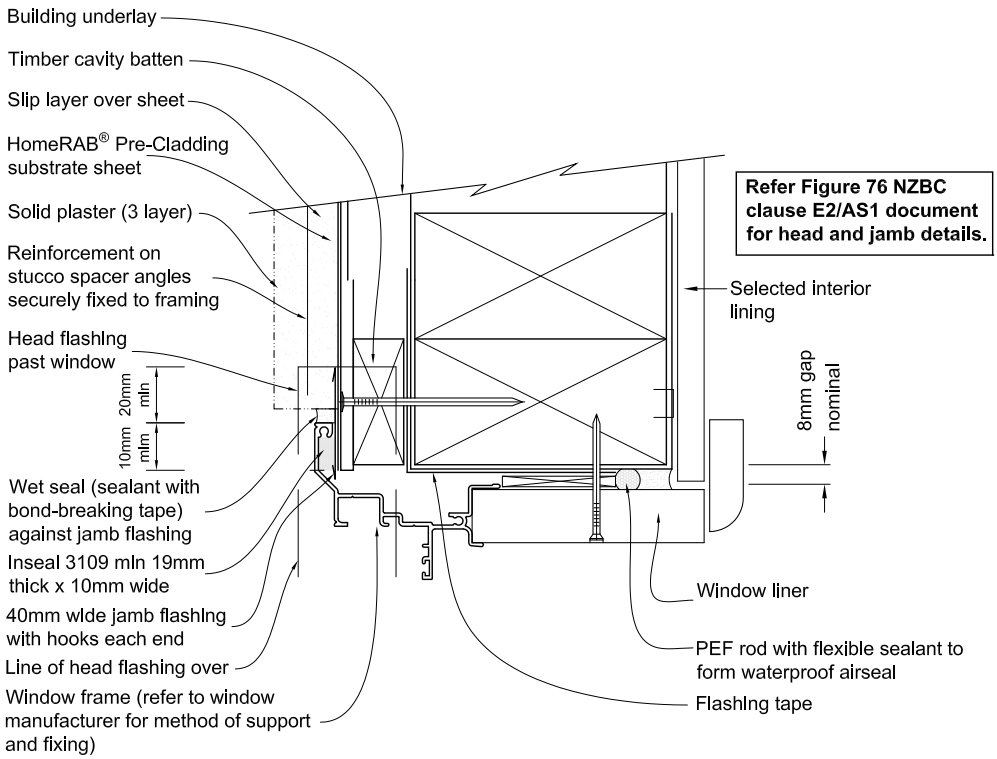

Figure 13: Horizontal drainage joint

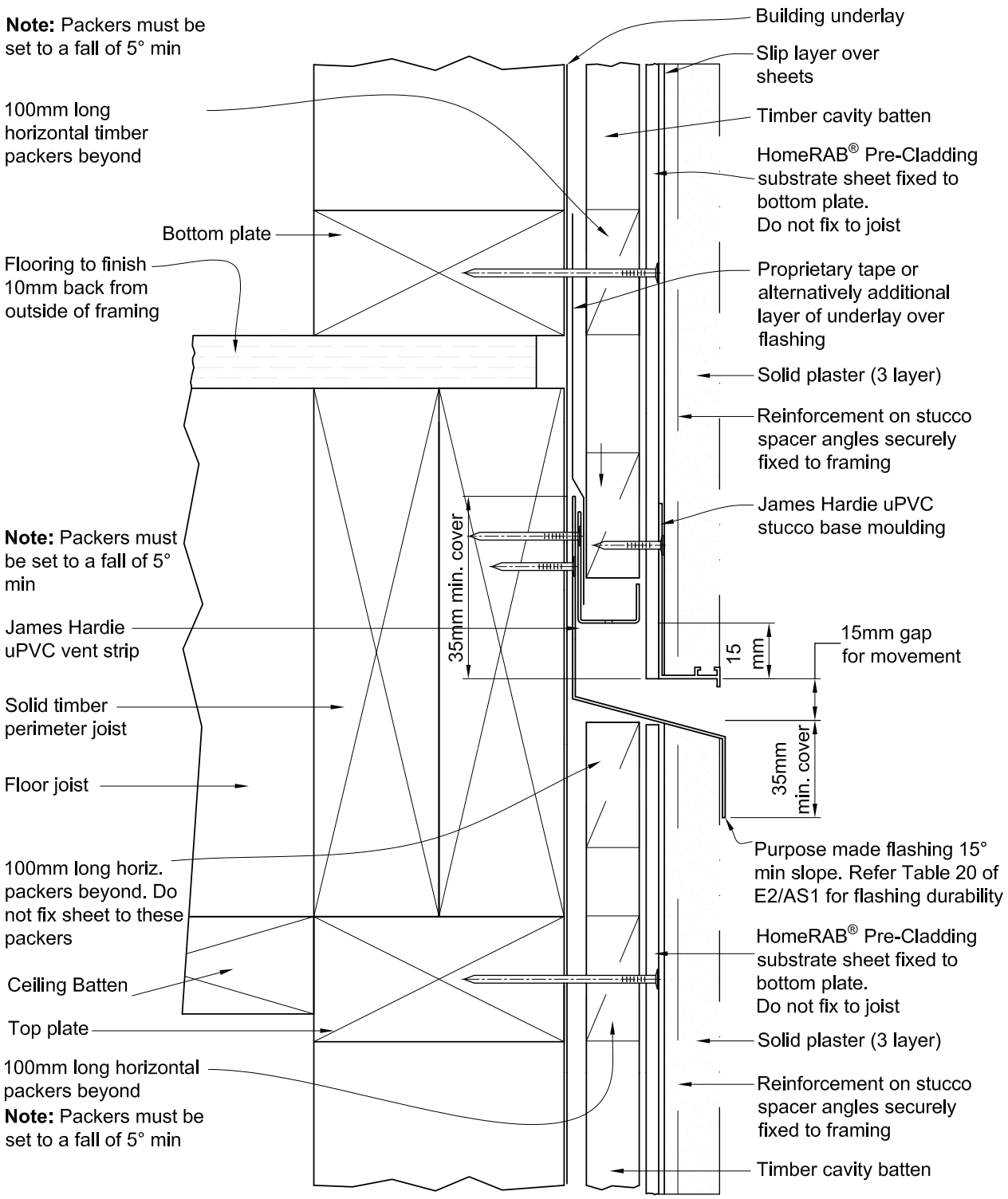

Figure 14: Horizontal control joint

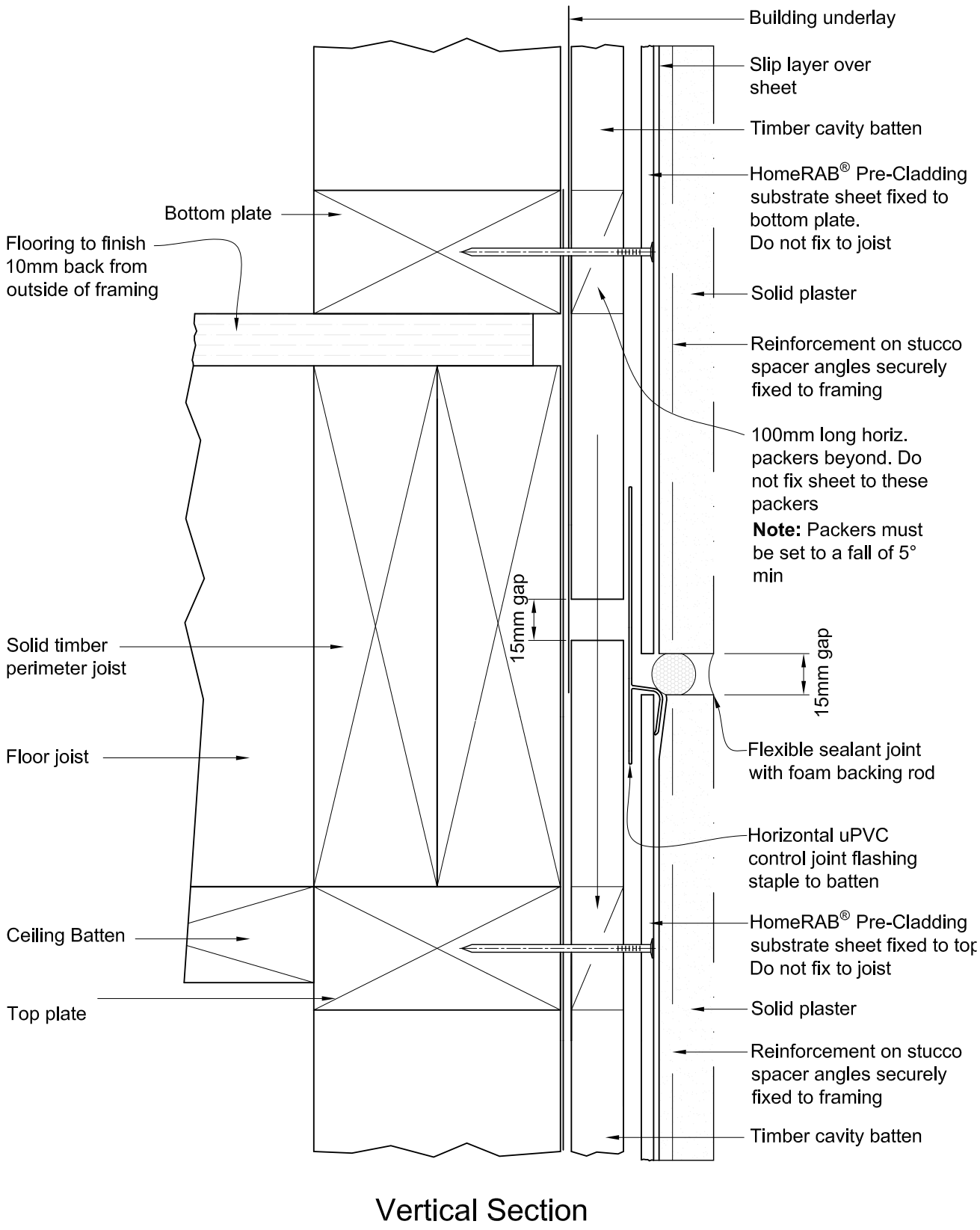

Figure 15: ‘h’ mould joiner connection

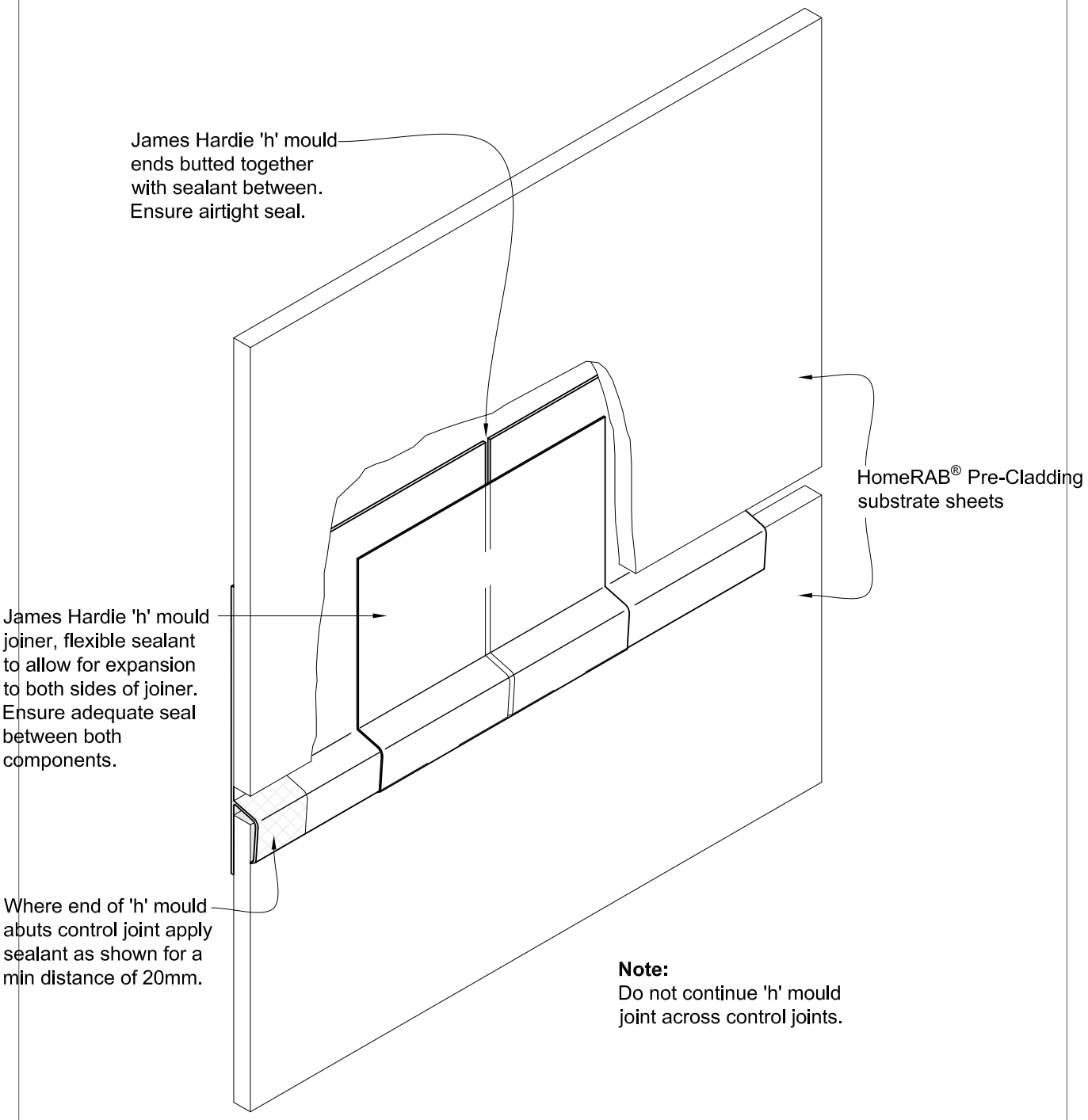

Figure 16: Stucco Spacer angle fixing

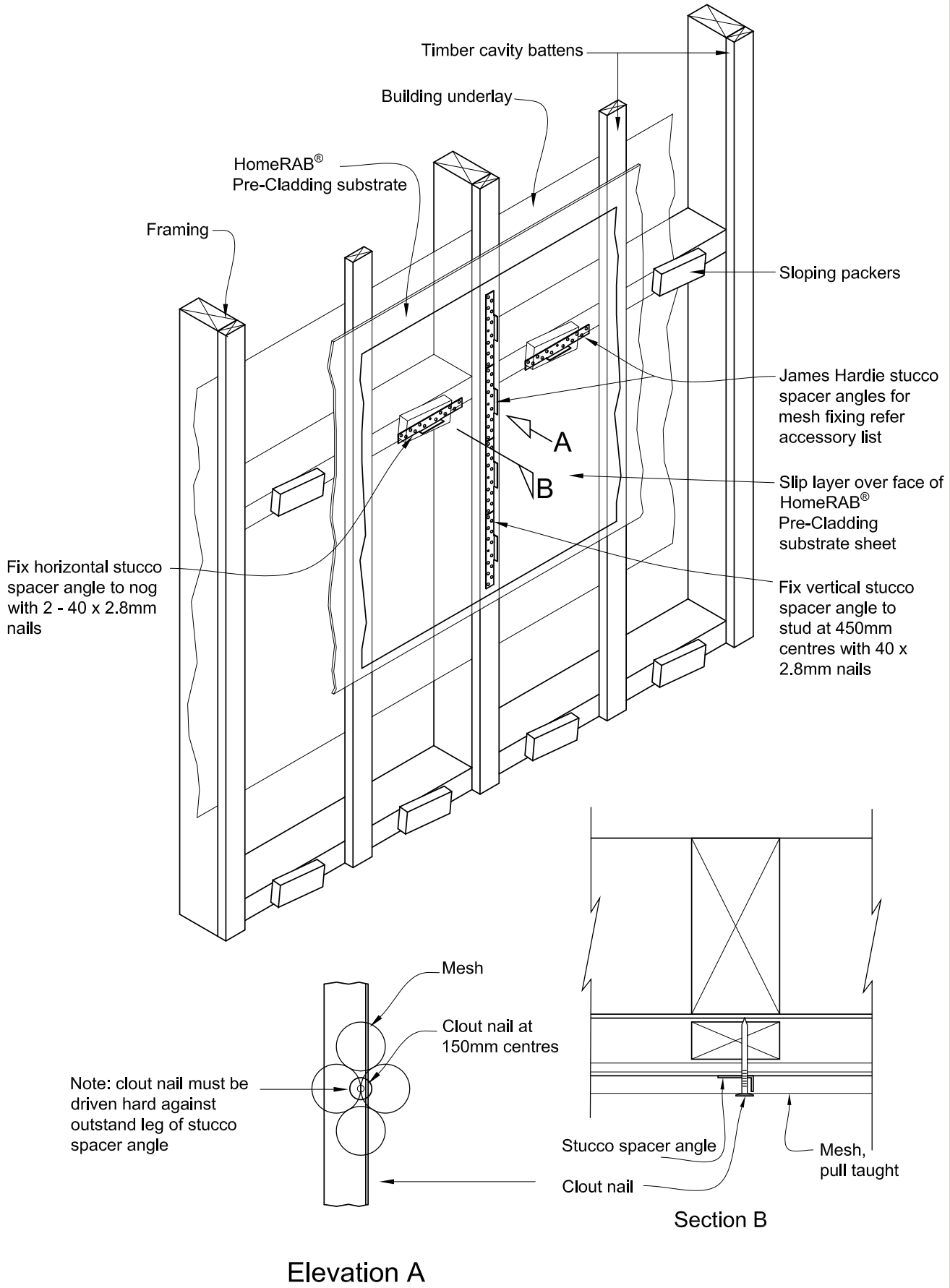

Notes

Product Warranty

Stucco Solution

James Hardie New Zealand Limited ("James Hardie") warrants for a period of 15 years from the date of purchase that the HomeRAB™ Pre-Cladding substrate sheet (the "Product"), will be free from defects due to defective factory workmanship or materials and, subject to compliance with the conditions below, will be resistant to cracking, rotting, fire and damage from termite attacks to the extent set out in James Hardie's relevant published literature current at the time of installation. James Hardie warrants for a period of 15 years from the date of purchase that the accessories supplied by James Hardie will be free from defects due to defective factory workmanship or materials.

Nothing in this document shall exclude or modify any legal rights a customer may have under the Consumer Guarantees Act or otherwise which cannot be excluded or modified at law.

CONDITIONS OF WARRANTY:

The warranty is strictly subject to the following conditions:

a) James Hardie will not be liable for breach of warranty unless the claimant provides proof of purchase and makes a written claim either within 30 days after the defect would have become reasonably apparent or, if the defect was reasonably apparent prior to installation, then the claim must be made prior to installation.

b) This warranty is not transferable.

c) The Product must be installed and maintained strictly in accordance with the relevant James Hardie literature current at the time of installation and must be installed in conjunction with the components or products specified in the literature. Further, all other products, including coating and jointing systems, applied to or used in conjunction with the Product must be applied or installed and maintained strictly in accordance with the relevant manufacturer's instructions and good trade practice.

d) The project must be designed and constructed in strict compliance with all relevant provisions of the current New Zealand Building Code ("NZBC"), regulations and standards.

e) The claimant's sole remedy for breach of warranty is (at James Hardie's option) that James Hardie will either supply replacement product, rectify the affected product or pay for the cost of the replacement or rectification of the affected product.

f) James Hardie will not be liable for any losses or damages (whether direct or indirect) including property damage or personal injury, consequential loss, economic loss or loss of profits, arising in contract or negligence or howsoever arising. Without limiting the foregoing James Hardie will not be liable for any claims, damages or defects arising from or in any way attributable to poor workmanship, poor design or detailing, settlement or structural movement and/or movement of materials to which the Product is attached, incorrect design of the structure, acts of God including but not limited to earthquakes, cyclones, floods or other severe weather conditions or unusual climatic conditions, efflorescence or performance of paint/coatings applied to the Product, normal wear and tear, growth of mould, mildew, fungi, bacteria, or any organism on any Product surface or Product (whether on the exposed or unexposed surfaces).

g) All warranties, conditions, liabilities and obligations other than those specified in this warranty are excluded to the fullest extent allowed by law.

h) If meeting a claim under this warranty involves re-coating of Products, there may be slight colour differences between the original and replacement Products due to the effects of weathering and variations in materials over time.

Disclaimer: The recommendations in James Hardie's literature are based on good building practice, but are not an exhaustive statement of all relevant information and are subject to conditions (c), (d), (f) and (g) above. James Hardie has tested the performance of the HomeRAB™ Pre-Cladding substrate sheet when installed in accordance with the James Hardie™ Stucco Solution technical specification, in accordance with the standards and verification methods required by the NZBC and those test results demonstrate the product complies with the performance criteria established by the NZBC. However, as the successful performance of the relevant system depends on numerous factors outside the control of James Hardie (e.g. quality of workmanship and design) James Hardie shall not be liable for the recommendations made in its literature and the performance of the relevant system, including its suitability for any purpose or ability to satisfy the relevant provisions of the NZBC, regulations and standards, as it is the responsibility of the building designer to ensure that the details and recommendations provided in the relevant James Hardie installation manual are suitable for the intended project and that specific design is conducted where appropriate.

James Hardie

Ask James Hardie™ | Call 0800 808 868 | jameshardie.co.nz