JamesHardie™

jameshardie.co.nz

Stria™ Cladding

Fine Texture
Horizontal Installation

Technical Specification

April 2026 New Zealand

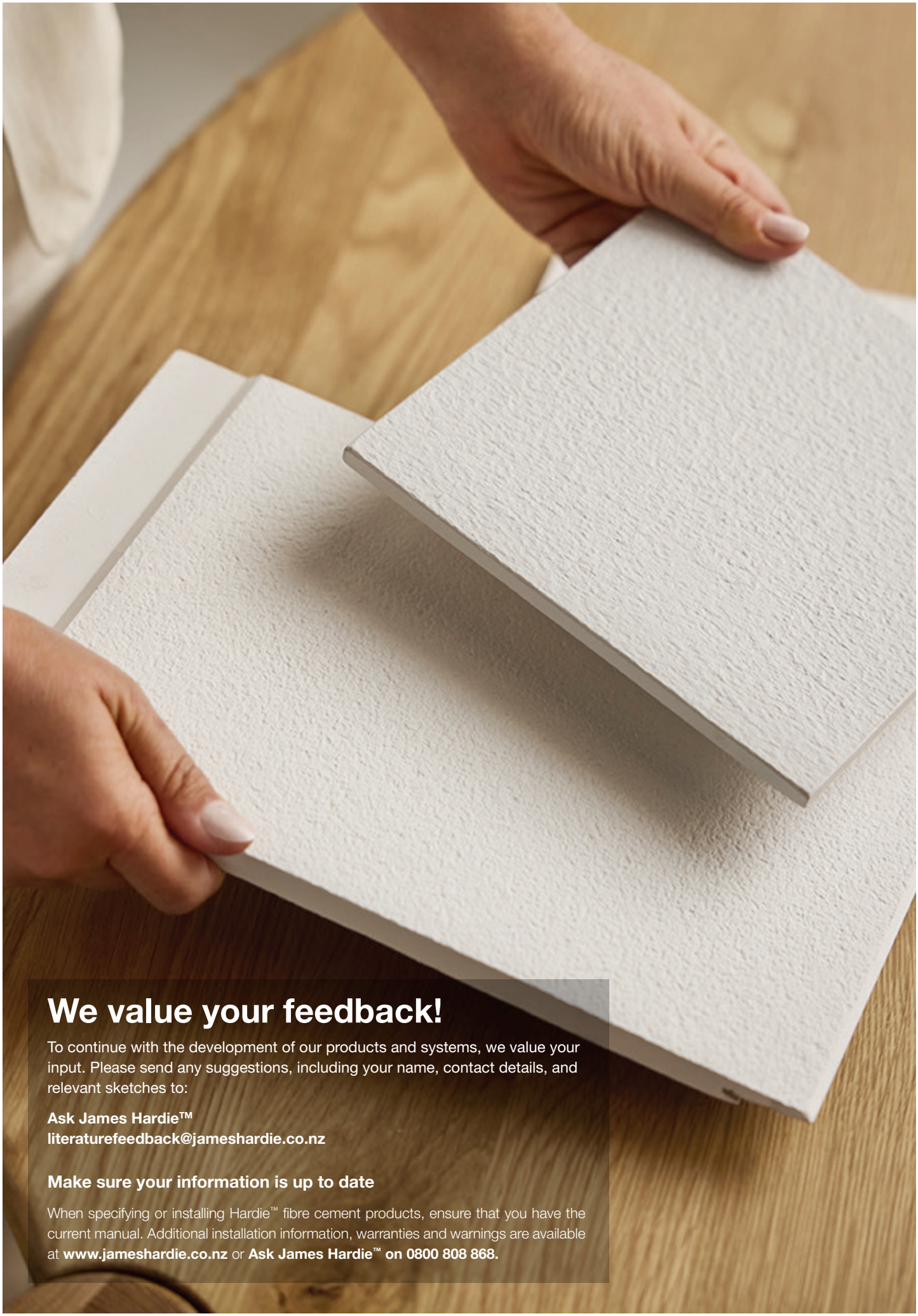

We value your feedback!

To continue with the development of our products and systems, we value your input. Please send any suggestions, including your name, contact details, and relevant sketches to:

Ask James Hardie™
literaturefeedback@jameshardie.co.nz

Make sure your information is up to date

When specifying or installing Hardie™ fibre cement products, ensure that you have the current manual. Additional installation information, warranties and warnings are available at **www.jameshardie.co.nz** or **Ask James Hardie™ on 0800 808 868.**

Contents

1 Product Overview 4

1.1 Product Information 4
1.2 Manufacturing and Classification 4
1.3 Components and Accessories 5

2 Application and Scope 7

2.1 Application 7
2.2 Scope 7
2.3 Details 7
2.4 Specific Design 7

3 Compliance 8

4 Design 9

4.1 Responsibility 9
4.2 Clearances 9
4.3 Moisture Management 9
4.4 Structure 10
4.5 Wind Pressures 10
4.6 Bracing 10
4.7 Energy Efficiency 10
4.8 Fire Rated Walls 10
4.9 Control of External Fire Spread 10
4.10 Durability 11
4.11 Alpine Regions 11

5 Safe Working Practices 12

5.1 Storage and Delivery 14
5.2 Tips for Safe and Easy Handling of Stria™ Cladding Fine Texture 15

6 Installation 16

6.1 Framing 16
6.2 Flexible Underlay or HomeRAB™ Pre-Cladding 17
6.3 Intermediate Support for Flexible Underlays 17
6.4 Rigid Air Barrier and RAB™ Board 17
6.5 Flashings 17
6.6 Cavity Closure/Vent Strip 18
6.7 Cavity Battens 18
6.8 Fastener 18
6.9 Joints 20
6.10 Junctions and Penetrations 20

7 Finishes 21

7.1 Preparation 21
7.2 Painting 21
7.3 Flexible Sealant 21

8 Care and Maintenance 22

9 Details Section Index 23

Product Warranty 69

1 Product Overview

1.1 Product Information

Stria™ Cladding Fine Texture installed as per this specification gives a panelised appearance on building facades. Stria™ Cladding Fine Texture can be fixed to timber framed external walls. A wide range of colours can be used, varying from light to dark.

Table 1

Stria™ Cladding Fine Texture information					
Product	**Description**	**Size (mm)**			**Code**
		Thickness	**Length**	**Width**	
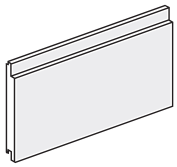	**Stria™ Cladding Fine Texture** A 14mm profiled textured panel for 'V' jointed residential facades. Factory sealed on all six sides. Each panel has a manila white colour primer applied on its face, which accepts a wide range of paint finishes.	14	4200	325	**405570**
		14	3000	325	**405571**

Note: All dimensions and masses provided are approximate only and subject to manufacturing tolerances. Stria™ Cladding Fine Texture has a mass of 16kg/m^2 at EMC. Stria™ Cladding Fine Texture is defined as a Light Weight Wall Cladding (not exceeding 30kg/m^2) as per the NZS 3604.

1.2 Manufacturing and Classification

Stria™ Cladding Fine Texture is an advanced lightweight cement composite cladding manufactured using James Hardie formulation. Basic composition is Portland cement, ground sand, cellulose fibre, water and proprietary additives. The product is easily identified by the name 'Stria™ Cladding Fine Texture' printed on the back of the panels.

Stria™ Cladding Fine Texture is manufactured in Australia to the Australian/New Zealand Standard AS/NZS 2908.2 'Cellulose-Cement Products' (ISO 8336 'Fibre-Cement Flat Sheet').

Stria™ Cladding Fine Texture is classified Type A, Category 3 in accordance with the AS/NZS 2908.2 "Cellulose-Cement Products".

For Safety Data Sheets (SDS) visit **www.jameshardie.co.nz** or Ask James Hardie™ on **0800 808 868.**

1.3 Components and Accessories

Table 2

Accessories/tools supplied by James Hardie			
Accessories	**Description**	**Size/Quantity**	**Code**
	Vertical Joint Flashing Aluminium extrusion used behind cladding at vertical joints.	3000mm long	**305507**
	Hardie™ 14mm Trimline Joint Flashing Aluminium extrusion used behind cladding at vertical and horizontal joints.	3000mm long	**305827**
	Trimline Horizontal Jointer A jointer to cover the horizontal butt joint of Hardie™ 14mm Trimline Joint Flashing	100mm long	**305871**
	Trimline Hardie™ 14mm External Corner Jointer Joins Hardie™ 14mm Trimline Joint Flashing at an external corner		**305870**
	Trimline Internal Corner Jointer Joins Hardie™ 14mm Trimline Joint Flashing at an internal corner		**305872**
	Hardie™ 14mm Internal Corner Flashing Anodised aluminium extrusion used to create internal corners.	3000mm long	**304871**
	Hardie™ 14mm External Box Corner Anodised aluminium extrusion used to create external corners.	3000mm long 4000mm long	**306261** **305823**
	Hardie™ 14mm Slimline External Corner Anodised aluminium slimline extrusion used to create external corners.	3000mm long	**306340**
	Aluminium Window Jamb Flashing Aluminium moulding used beside window opening to end butt the Stria™ Cladding Fine Texture.	3000mm long	**305430**
	Hardie™ 28mm Aluminium Cavity Closure Aluminium moulding used as vermin proofing.	3000mm long	**305431**
	uPVC Vent Strip PVC moulding used as vermin proofing.	3000mm long	**302490**
Tools			
	Hardie™ Blade Saw Blade Diamond tip fibre cement circular saw blade. Spacers not included.	184mm 254mm	**300660** **303375**
	Hardie™ Flex Stainless Steel 316 Nails 60 x 3.15mm. For fixing concealed panels through cavity battens.	5kg	**302782**
	Hardie™ Flex Stainless Hot Dip Galv. Nails 60 x 3.15mm. For fixing concealed panels through cavity battens.	5kg	**302784**
	Hardie™ Flex Stainless Steel 316 Nails 75 x 3.15mm. For fixing concealed panels through cavity battens and RAB™ Board.	5kg	**304253**
	Hardie™ Flex Stainless Hot Dip Galv. Nails 75 x 3.15mm. For fixing concealed panels through cavity battens and RAB™ Board.	5kg	**304251**

Table 3

Accessories/Tools not supplied by James Hardie	
James Hardie recommends the following products for use in conjunction with Stria™ Cladding Fine Texture. James Hardie does not supply these products and does not provide a warranty for their use. Please contact component manufacturer for information on their warranties and further information on their products.	
Product	**Description**
	Flexible underlay Must comply with Table C.2.1.1 of E2/AS1.
	Flexible Window Opening Flashing Tape A flexible self-adhesive tape used in preparation of a window. Refer to the window installation section in this manual for more information. e.g. Protecto® or Super-stick building tape® by Marshall Innovations or 3M™ All Weather Flashing Tape 8067 by 3M™ Marshall Innovations: 0800 776 9727 3M™ 0800 474 787
	Flexible Sealant Required to seal the vertical joints. Bostik® Seal N' Flex® 1, Sikaflex® AT Facade, Sikaflex® MS or similar.
	65 x 2.8mm HDG Round Head Ecko Ring Shank Coil Nail (HHG-65V8R) For concealed fixing.
	65 x 2.87mm HDG Paslode Dekfast (RounDrive) Nail (B20558V) For concealed fixing.
	65 x 2.8mm Stainless Round Head Ecko Ring Shank Coil Nail (HHSS-65V8R) For concealed fixing.
	75 x 3.06mm HDG Paslode Dekfast Ring Shank Ring Shank (RounDrive) Nail (B20564V) For concealed fixing.
	75 x 3.15mm Stainless Round Head Ecko Ring Shank Coil Nail (HHSS-75V8R) For concealed fixing.
	40 x 2.8mm or longer Hardie™ Flex nail. For fixing timber cavity battens and aluminium flashings.
	Jolt head nail 60 x 3.15mm (hot dipped galvanised or ring shank stainless steel) For fixing Stria™ Cladding Fine Texture.
	Jolt head nail 75 x 3.15mm (hot dipped galvanised or ring shank stainless steel) For fixing Stria™ Cladding Fine Texture.
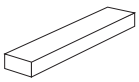	**Timber cavity batten** H3.1 minimum treated timber cavity batten the cladding is fixed over.
	Exterior grade filler CRC® ADOS® Builders Fill or similar two part filler to fill over nail holes
	Penetration Seal Thermakraft™: 0800 806 595 Marshall Innovations: 0800 776 9727

2 Application and Scope

2.1 Application

Stria™ Cladding Fine Texture can be fixed to either timber or lightweight steel-framed external walls.

This specification is for the use of Stria™ Cladding Fine Texture in cavity construction.

The document also serves the purpose of an installation manual for this product.

For fixing to a steel frame: Ask James Hardie™ on 0800 808 868 for specific requirements, or refer to the Steel Frame Technical Supplement by James Hardie about the installation of Stria™ Cladding Fine Texture to steel frame.

Specifiers

If you are a specifier or other responsible party for a project, ensure that the information in this document is appropriate for the application you are planning and that you undertake specific design and detailing for areas which fall outside the scope of these specifications.

Installers

If you are an installer, ensure that you follow the design, moisture management principles, associated figures and material selection provided by the designer and this technical specification. All the details provided in this document must be read in conjunction with the project specification.

Make sure your information is up to date

When specifying or installing Hardie™ fibre cement products, ensure that you have the current manual. Additional installation information, warranties and warnings are available at www.jameshardie.co.nz or Ask James Hardie™ on 0800 808 868.

2.2 Scope

This specification covers the installation of Stria™ Cladding Fine Texture within the following scope:

- All buildings within the scope of the NZS 3604 or SED up to 2.4kPa (ULS) wind pressure.
- The Stria™ Cladding Fine Texture must be installed horizontally.
- In wind zone above very high i.e. EH, a rigid air barrier must be used.

Note: Refer to Stria™ Cladding Fine Texture Vertical Installation technical specification when fixing to timber cavity battens vertically.

2.3 Details

Various typical Stria™ Cladding Fine Texture construction details are provided within this document. These details are available in dwg, dxf, jpg and pdf file format and can be downloaded from our website at **www.jameshardie.co.nz**.

Note: All dimensions shown are in millimetres unless noted otherwise.

2.4 Specific Design

For use of the Stria™ Cladding Fine Texture on specific design projects, the designer, architect or engineer must ensure that all clauses of New Zealand Building Code (NZBC) have been considered and a specific design has been undertaken for the areas which fall outside the scope of this literature.

3 Compliance

Stria™ Cladding Fine Texture installed in accordance with this specification has been tested to demonstrate compliance with clauses E2, B1, B2 and F2 of the NZBC.

When installed in accordance with the conditions of CodeMark number GM-CM30109 Stria™ Cladding Fine Texture complies with all relevant requirements of the NZBC. Please refer to www.tepae.building.govt.nz for a copy of the certificate.

CodeMark
CMNZ30109

Stria™ Cladding Fine Texture Horizontal Installation has a BRANZ Appraisal number 1224 (2022) to demonstrate compliance with the requirements of the NZBC. Please refer to our website **www.jameshardie.co.nz** for a copy of the BRANZ appraisal.

BRANZ Appraised
Appraisal No. 1224

4 Design

4.1 Responsibility

The specifier or other party responsible for the project must ensure that the information and details in this specification are appropriate for the intended application and that additional detailing is performed for specific design or any areas that fall outside the scope of this technical specification. For applications outside the scope of this literature and details, which are not provided herein, the architect, designer or engineer must undertake specific design and it should be ensured that the intent of their design meets the requirements of the NZBC.

All New Zealand Standards referenced in this manual are current editions and must be complied with.

James Hardie conducts stringent quality checks to ensure that any product manufactured falls within our quality spectrum. It is the responsibility of the builder to ensure that the product meets aesthetic requirements before installation. James Hardie will not be responsible for rectifying obvious aesthetic surface variations following installation.

4.2 Clearances

The clearance between the bottom edge of the cladding and paved/unpaved ground of cladding must comply with Subsection 9.1.2 of E2/AS1. The finished floor must also comply with these requirements. These clearances must be maintained throughout the life of the building.

Stria™ Cladding Fine Texture must overhang the bottom plate by a minimum of 50mm as per Table 9.1.2.1, and for timber sub floor framing as per Paragraph 9.1.2.8 of NZBC Acceptable Solution E2/AS1.

Stria™ Cladding Fine Texture must maintain a minimum clearance of 100mm from paved ground, and 175mm from unpaved ground. On roofs and decks, the minimum clearance must be 50mm.

4.3 Moisture Management

It is the responsibility of the specifier to identify moisture related risks associated with any particular building design.

Wall construction design must effectively manage moisture, considering both interior and exterior environments of the building, particularly in buildings that have a higher risk of wind driven rain penetration. The buildings should also be ventilated sufficiently to control moisture accumulation due to condensation, especially in artificially cooled/heated buildings.

Walls shall include those provisions as required by External Moisture Clause E2/AS1 of the NZBC. In addition, all wall openings, penetrations, junctions, connections, window sills, heads and jambs must incorporate appropriate flashings for waterproofing. Other materials, components and installation methods used to manage moisture in external walls, must comply with the requirements of relevant standards and the NZBC. For further guidance on designing for weathertightness, refer to BRANZ Ltd. and the Ministry of Business Innovation and Employment (MBIE) updates on the following websites respectively, **www.branz.co.nz** and **www.building.govt.nz.**

In addition, the following issues must also be considered:

- Sealant must be applied where detailed in this literature
- For buildings within the scope of E2/AS1, a drained horizontal joint must be provided after two floors as a minimum. For buildings more than 10m high, a drained horizontal joint must be provided at each floor to accommodate the interstory deflection
- The installation of smoke chimneys, pipe penetrations and other fixtures etc. must not track moisture into the wall or restrict the drainage of moisture to the exterior

4.4 Structure

Timber framed buildings must either be in accordance with the NZS 3604 (Timber-framed buildings) or designed as per specific engineering design (SED) up to design wind pressures 2.4kPa (ULS).

A 90 x 45mm minimum framing size is required

The information published in this specification has been assessed for a timber structural grade SG8 at minimum. Refer to the NZS 3604 for further information on structural grades and their application.

For timber frame walls longer than 12m, it is best practice to allow for construction joints to accommodate movements generated due to timber shrinkage or structural deflections.

4.4.1 Durability

Timber framing must be treated in accordance with Section 3.3 of B2/AS1 'Durability' Clause of the NZBC. For further timber treatment information refer to Section 3.5.1 of Building Product Specification (BPS). Framing must be protected from moisture at sites in accordance with the recommendations of framing manufacturers. Refer to the NZS 3602 for information about the allowable moisture content in timber framing.

4.5 Wind Pressures

Stria™ Cladding Fine Texture is suitable for use in all wind zones in New Zealand up to and including EH as defined in the NZS 3604.

Stria™ Cladding Fine Texture is also suitable in specific design projects up to wind pressures of 2.4kPa ULS.

4.6 Bracing

Stria™ Cladding Fine Texture installed as per this specification cannot be used to achieve any structural bracing. However, bracing can be achieved by using HomeRAB™ Pre-Cladding/RAB™ Board installed direct to framing instead of a flexible underlay or by using Villaboard™ Lining or Hardie™ Groove Lining bracing system on the internal face of the wall. Refer to the Bracing Design Manual by James Hardie for further information.

4.7 Energy Efficiency

External walls constructed as per this technical specification, using Stria™ Cladding Fine Texture must use suitable bulk insulation to meet the minimum thermal insulation requirements as per Clause H1/AS1 'Energy Efficiency' of the NZBC.

4.8 Fire Rated Walls

Stria™ Cladding Fine Texture when fixed over timber cavity battens to external walls can achieve fire ratings up to 60/60/60 to comply with Clause C/AS1 of the NZBC when the walls are constructed in accordance with the current Fire and Acoustic Design Manual by James Hardie.

Nogs in fire rated walls must be at 800mm centres maximum.

Stria™ Cladding Fine Texture is classified as a 'non-combustible' material suitable for use on walls close to a boundary.

4.9 Control of External Fire Spread

Stria™ Cladding Fine Texture is classified as 'Type-A' material when tested to the requirements of Section 8.4 of Building Product Specification (BPS) of the NZBC and is suitable for use where 'Non-Combustible Material' or ' Limited Combustibility Material' is required for for use in buildings located anywhere in relation to the relevant boundary for building within the scope of C/AS1 or C/AS2.

- Where the upper floors contain sleeping uses or other property within the scope of Clause C/AS2, a horizontal flashed joint must be provided to block the top of lower cavity at each floor to stop fire spread within the cavities as per Subsection 5.5.3 of C/AS2 of the NZBC
- On buildings greater than 10m in height a RAB™ Board must be used in conjunction with Stria™ Cladding Fine Texture
- For Stria™ Cladding Fine Texture on buildings with inter-tenancy horizontal joint an aluminium vent strip must be used.

4.10 Durability

Stria™ Cladding Fine Texture installed and maintained as per this technical specification will meet the durability requirement for cladding as per the NZBC clause B2 Durability.

Stria™ Cladding Fine Texture is resistant to permanent moisture induced deterioration (rotting) and meets the requirements of the following tests in accordance with the AS/NZS 2908.2:

- Heat Rain (Clause 6.5)
- Water Permeability (Clause 8.2.2)
- Warm Water (Clause 8.2.4)
- Soak Dry (Clause 8.2.5)

4.11 Alpine Regions

In regions subject to freeze/thaw conditions, Stria™ Cladding Fine Texture and HomeRAB™ Pre-Cladding/RAB™ Board, must not stay in direct contact with snow or ice build up for extended periods, e.g. external walls in alpine regions must be protected where snowdrifts over winter are expected.

These products have been tested in accordance with the AS/NZS 2908.2 Clause 8.2.3.

5 Safe Working Practices

WARNING - DO NOT BREATHE DUST AND CUT ONLY IN WELL VENTILATED AREA

Hardie™ fibre cement products contain sand, a source of respirable crystalline silica

May cause cancer if dust from product is inhaled. Causes damage to lungs and respiratory system through prolonged or repeated inhalation of dust from product.

Intact fibre cement products are not expected to result in any adverse toxic effects. The hazard associated with fibre cement arises from the respirable crystalline silica present in dust generated by activities such as cutting, rebating, drilling, routing, sawing, crushing, or otherwise abrading fibre cement, and when cleaning up, disposing of or moving dust.

When doing any of these activities in a manner that generates dust, follow James Hardie's instructions and best practices to reduce or limit the release of dust.

If using a dust mask or respirator, use an AS/NZS 1716 P1 filter and refer to Australian/New Zealand Standard 1715:2009 Selection, Use and Maintenance of Respiratory Protective Equipment for more extensive guidance and more options for selecting respirators for workplaces. For further information, refer to our installation instructions and Safety Data Sheets available at www.jameshardie.co.nz.

FAILURE TO ADHERE TO OUR WARNINGS, SAFETY DATA SHEETS, AND INSTALLATION INSTRUCTIONS MAY LEAD TO SERIOUS PERSONAL INJURY OR DEATH.

Crystalline Silica is

- Commonly known as sand or quartz
- Found in many building products e.g. concrete, bricks, grout, wallboard, ceramic tiles, and all fibre cement materials

Why is Crystalline Silica a health hazard?

- Silica can be breathed deep into the lungs when present in the air as a very fine (respirable) dust
- Exposure to silica dust without taking the appropriate safety measures to minimise the amount being breathed in, can lead to a potentially fatal lung disease – silicosis – and has also been linked with other diseases including cancer. Some studies suggest that smoking may increase these risks
- The most hazardous dust is the dust you cannot see!

When is Crystalline Silica a health hazard?

- It’s dangerous to health if safety protocols to control dust are not followed when cutting, drilling or rebating a product containing crystalline silica and when cleaning up
- Products containing silica are harmless if intact (e.g. an un-cut sheet of wall board)

Avoid breathing in crystalline silica dust

Safe working practices

- ✗ NEVER use a power saw indoors or in a poorly ventilated area
- ✗ NEVER dry sweep
- ✓ ALWAYS use M Class or higher vacuum or damp down dust before sweeping up
- ✗ NEVER use grinders
- ✓ ALWAYS use a dust reducing circular saw equipped with a sawblade specifically designed to minimise dust creation when cutting fibre cement – preferably a sawblade that carries the Hardie™ Blade name or one with at least equivalent performance – connected to an M Class or higher vacuum
- ✓ Before cutting warn others in the area to avoid dust
- ✓ ALWAYS follow tool manufacturers' safety recommendations
- ✓ ALWAYS expose only the minimum required depth of blade for the thickness of fibre cement to be cut
- ✓ ALWAYS wear a properly-fitted, approved dust mask or respirator P1 or higher in accordance with applicable government regulations and manufacturer instructions
- ✓ Consider rotating personnel across cutting tasks to further limit respirable silica exposures..

When cutting Stria™ Cladding Fine Texture:

- ✓ Work outdoors only
- ✓ Make sure you work in a well ventilated area
- ✓ Position cutting station so wind will blow dust away from yourself and others in the working area
- ✓ Rotate employees across cutting task over duration of shift
- ✓ Cut products with a Hardie™ Blade Saw Blade (or equivalent) and a dust reducing circular saw connected to a M Class or higher vacuum
- ✓ When sawing, sanding, rebating, drilling or machining fibre cement products, always:
  - Wear your P1 or higher (correctly fitted in accordance with manufacturers' instructions), ask others to do the same.
  - Keep persons on site at least 2 metres and as far as practicable away from the cutting station while the saw is in operation
  - If you are not clean shaven, then use a powered air respirator with a loose fitting head top
  - Wear safety glasses
  - Wear hearing protection
- ✓ Make sure you clean up BUT never dry sweep. Always hose down with water/wet wipe or use an M Class or higher vacuum

If concern still exists about exposure levels or you do not comply with the above practices, you should always consult a qualified industrial hygienist or contact James Hardie for further information.

Working Instructions

Hardie™ Blade Saw Blade

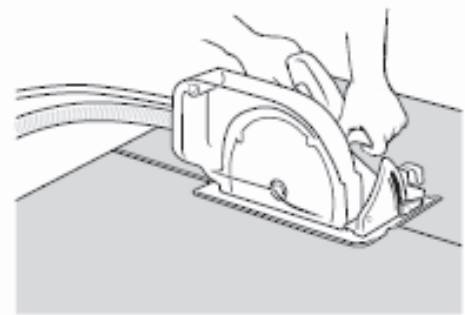

The Hardie™ Blade Saw Blade used with a dust-reducing saw is ideal for fast, clean cutting of Hardie™ fibre cement products. A dust-reducing saw uses a dust collector connected to a M Class or higher vacuum. When sawing, clamp a straight edge to the sheet as a guide and run the saw base plate along the straight edge when making the cut.

Hole-Forming

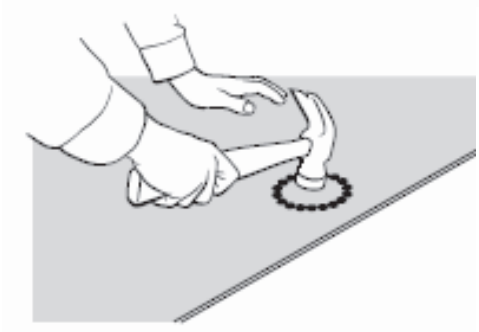

For smooth clean cut circular holes:

- Mark the centre of the hole on the sheet
- Pre-drill a 'pilot' hole
- Using the pilot hole as a guide, cut the hole to the appropriate diameter with a hole saw fitted to a heavy duty electric drill

For irregular holes:

- Small rectangular or circular holes can be cut by drilling a series of small holes around the perimeter of the hole then tapping out the waste piece from the sheet face
- Tap carefully to avoid damage to sheets, ensuring that the sheet edges are properly supported

5.1 Storage and Delivery

Keeping products and people safe

Off loading

✓ Hardie™ fibre cement products should be off-loaded carefully by hand or by forklift

✓ Hardie™ fibre cement products should not be rolled or dumped off a truck during the delivery to the jobsite

Storage

Hardie™ fibre cement products should be stored:

✓ In their original packaging

✓ Under cover where possible or otherwise protected with a waterproof covering to keep products dry

✓ Off the ground – either on a pallet or adequately supported on timber or other spacers

✓ Flat so as to minimise bending

Hardie™ fibre cement products must not be stored:

✗ Directly on the ground

✗ In the open air exposed to the elements

James Hardie is not responsible for damage due to improper storage and handling.

5.2 Tips for Safe and Easy Handling of Stria™ Cladding Fine Texture

- ✗ Do not lift planked products flat and in the middle
- ✓ Carry the products on the edge
- ✓ If only one person is carrying the product, hold it in the middle and spread arms apart to better support the product
- ✓ If two people are carrying the plank, hold it near each end and on edge
- ✓ Exercise care when handling planked products to avoid damaging the edges/corners

6 Installation

Stria™ Cladding Fine Texture is installed horizontally using the cavity construction method as per the details and information published in this document. Stria™ Cladding Fine Texture panels are 325mm wide and are installed with a 29mm nominal lap over the next panel. Considering the installation and machining variations, the effective cover for Stria™ Cladding Fine Texture can vary between 295 to 297mm.

Stria™ Cladding Fine Texture must be kept under cover whilst in storage or at sites and they must be dry at the time of their installation. All site cut panel edges must be sealed with Dulux® 1 Step, Resene® Quick Dry, Taubmans® Underproof Acrylic Primer Undercoat or similar sealer compatible with the finish coat before installation.

Stria™ Cladding Fine Texture must be fully supported and fixed through timber cavity battens. Ensure that cladding is hard against the battens to avoid drumminess before fixing.

To achieve best aesthetic results it is recommended to position vertical jointer by the corner of openings or coinciding with the centre line of openings. Refer to Figure 2.

This technical specification only covers the horizontal installation of Stria™ Cladding Fine Texture. For vertical installation refer to the Stria™ Cladding Fine Texture vertical installation technical specification.

6.1 Framing

Stria™ Cladding Fine Texture can be fixed either to a timber-frame or steel-frame.

For fixing to a steel frame. Ask James Hardie™ on **0800 808 868** for specific requirements, or refer to the Steel Frame Technical Supplement by James Hardie about the installation of Stria™ Cladding to steel frame.

6.1.1 Frame Construction

Use of timber framing must be in accordance with the NZS 3604 and the framing manufacturer's specifications. The framing must be rigid and not rely on the cladding for stability. Timber framing sizes and its set-out must comply with the NZS 3604 and as specified in this technical specification.

The following framing is required:

- Studs must be provided at 600mm centres maximum as per the NZS 3604
- Nogs must be provided as per framing requirements. For fire rated walls, the nogs must be provided at 800mm centres.

6.1.2 Special Framing Requirements

The following are special framing requirements for both timber and steel framing:

- Double studs are required at internal corners, refer Figure 14
- Extra packers maybe required at external corners
- When Stria™ Cladding Fine Texture in fire rated wall systems by James Hardie, post fire stability stud spacing maybe required to be at closer centres. Refer to Fire and Acoustic Design Manual by James Hardie for information

6.1.3 Tolerances

In order to achieve the required performance and an acceptable wall finish, it is imperative that framing is straight and true. Framing tolerances shall comply with Table 2.1 of the NZS 3604 and the manufacturer's specifications. All framing shall be made flush.

The visual aspects of the finished cladding can differ between two different sites or the builders installing the product. It is recommended that you also refer to a building guidance document published by MBIE to understand an acceptable

level of tolerances allowed in building materials and workmanship. The 'Guide to tolerances, materials and workmanship in new residential construction 2015' can be found at www.building.govt.nz.

6.2 Flexible Underlay or HomeRAB™ Pre-Cladding

Flexible underlay/rigid air barrier eg. HomeRAB™ Pre-Cladding must be provided as per the requirements of External Moisture Clause E2 of the NZBC. The flexible underlay selected for use must comply with Table C.2.1.1 of E2/AS1.

The flexible underlay must be fixed in accordance with Subsection 9.1.6 of E2/AS1 and underlay manufacturer's recommendations.

Walls which are not lined on the inside face e.g. garage walls or gable ends must include a rigid sheathing or an air barrier behind the cladding which complies with Table C.2.1.1 of E2/AS1. HomeRAB™ Pre-Cladding complies with these requirements and is suitable for use in this situation. It must be installed in accordance with the HomeRAB™ Pre-Cladding and RAB™ Board Installation Manual.

6.3 Intermediate Support for Flexible Underlays

Where studs are at 600mm centres an intermediate means of restraining the flexible underlay and insulation from bulging into the cavity shall be installed. An acceptable solution as per Paragraph 9.1.7.10 of E2/AS1 of the NZBC is using one of the following options:

- intermediate cavity batten between the studs; or
- 75mm galvanised mesh; or
- polypropylene tape at 300mm centres fixed horizontally and drawn taut

No intermediate supports are required:

- when studs are spaced at 400mm centres; or
- when rigid air barriers instead of flexible underlays are used

6.4 Rigid Air Barrier and RAB™ Board

As per paragraph 9.1.6.2 of E2/AS1 in EH wind zone or for specific design wind zone, a rigid air barrier e.g. RAB™ Board must be used instead of flexible underlay as per E2/AS1 paragraph 9.1.6.2.

RAB™ Board must also be used in buildings that are higher than 10m.

To achieve temporary weathertightness using HomeRAB™ Pre-Cladding/RAB™ Board, windows/doors need to be installed with required flashing tapes and seals etc. Refer to the HomeRAB™ Pre-Cladding and RAB™ Board Installation Manual for information regarding its installation and to achieve temporary weathertightness.

6.5 Flashings

All wall openings, penetrations, intersections, connections, window sills, heads and jambs must be flashed prior to Stria™ Cladding Fine Texture installation. Refer to moisture management requirements in Clause 2.5. The flexible underlay/rigid air barrier must be appropriately incorporated with penetration and junction flashings using flashing tapes. Materials must be lapped in such a way that water tracks down to the exterior on the face of flexible underlay or rigid air barrier. James Hardie will assume no responsibility for water infiltration within the wall due to poor installation of flashings or flexible underlay.

The selected flashing materials must comply with the durability requirements of the NZBC. For information refer to Table C.1.1.1A of E2/AS1.

When using HomeRAB™ Pre-Cladding/RAB™ Board the entire framing around openings must be protected with a flashing tape. The tape must be finished over the face of the rigid air barrier. Refer to HomeRAB™ Pre-Cladding and RAB™ Board Installation Manual for further information.

6.6 Cavity Closure/Vent Strip

The Hardie™ 28mm Aluminium Cavity Closure or uPVC cavity vent strip must be installed at the bottom of all walls and above all openings constructed using the drained and ventilated cavity construction method. It is important that the openings in the cavity closure/vent strip are kept clear and unobstructed to allow free drainage and ventilation of cavities. Hardie™ 28mm cavity closure/uPVC strip has a ventilation area of 1000mm^2/m length.

6.7 Cavity Battens

Stria™ Cladding Fine Texture must be installed on a cavity. The cavity battens are provided in accordance with Paragraph 9.1.7.4 of E2/AS1.

The timber cavity battens must be minimum H3.1 treated in accordance with the NZS 3640 (Chemical preservation of rough and sawn timber) to comply with the durability requirements of B2/AS1.

Cavity battens must comply with Paragraph 9.1.7.8 of E2/AS1 and:

- be minimum 18mm thick and 45mm wide
- fixed vertically to studs
- fixed to framing using 40 x 2.8mm Hardie™ Flex nails at 600mm centres

6.8 Fastener

6.8.1 Fastener – Size and Layout

Stria™ Cladding Fine Texture must be fixed to framing using the fixings as specified in Tables 4 and 5 and follow the edge distance required for nails as shown in the details. Refer to Figures 6, 7 and 8.

When using rigid air barrier like HomeRAB™ Pre-Cladding or RAB™ Board, the cladding fixing nails must be increased in length equal to the thickness of the rigid air barrier.

When using other rigid air barriers compliant with E2/AS1 the cladding fixing nails must be increased in length equal to the thickness of the rigid air barrier.

Table 4

Stria™ Cladding Fine Texture over Flexible Underlay. Studs at 600mm max.

Wind Zone	Fastener Type	Fixing
Up to H	• 60 x 3.15mm Hardie™ Flex nail or • 65 x 2.87mm round head ring shank gun nail by **Paslode** or **Ecko**	Concealed fixing though the machined edge under the lap. **Refer to Figure 6**
Up to VH	• 60 x 3.15mm Hardie™ Flex nail or • 65 x 2.87mm round head ring shank gun nail by **Ecko**	Concealed fixing though the machined edge under the lap. **Refer to Figure 6**

Table 5

Stria™ Cladding Fine Texture over HomeRAB™ Pre-Cladding/RAB™ Board. Studs at 600mm max.

Wind Zone	Fastener Type	Fixing
Up to H	• 75 x 3.15mm Hardie™ Flex nail or • 75 x 3.05mm round head ring shank gun nail by **Paslode** or **Ecko**	Concealed fixing though the machined edge under the lap. **Refer to Figure 7**
Up to VH	• 75 x 3.15mm Hardie™ Flex nail or • 75 x 3.05mm round head ring shank gun nail by **Ecko**	Concealed fixing though the machined edge under the lap. **Refer to Figure 7**
Up to EH	• 75 x 3.15mm Hardie™ Flex nail , plus 70 x 3.15mm jolt head nail fixed through face: or • 75 x 3.05mm round head ring shank gun nail by **Paslode** or **Ecko,** plus 70 x 3.15mm jolt head nail fixed through face	Concealed fixing though the machined edge under the lap and a face nail. **Refer to Figure 8**

- The bottom board or top board, a jolt head face nail is required through the full thickness face of Stria™ Cladding Fine Texture for fixing
- Jolt head nails - finish nails 2mm below panel surface

For other fixing options Ask James Hardie™ on **0800 808 868.**

Nail depth

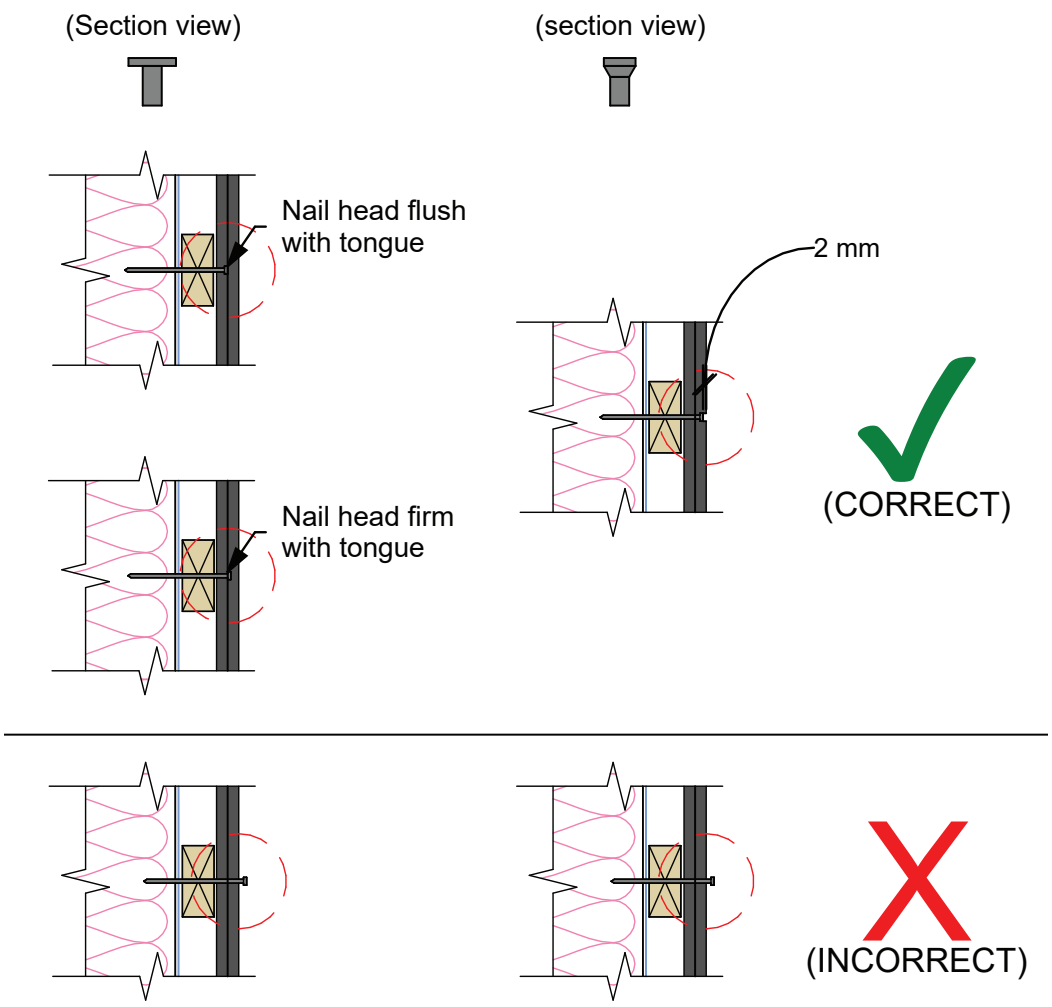

6.8.2 Fastener Durability

Fasteners must meet the minimum durability requirements of the NZBC. NZS 3604 specifies the requirements for fixing material to be used in relation to exposure conditions and are summarised in Table 6. Fasteners must be fully compatible with the other materials that they are to be in contact with, to ensure the durability of the complete assembly.

Also refer to the NZBC Acceptable Solution E2/AS1 Table C.1.1.1A and C.1.1.1B for information regarding the selection of suitable fixing materials and their compatibility with other materials.

Table 6

Exposure conditions and nail selection prescribed by the NZS 3604		
Zone	**Application**	
D (Sea Spray) * Geothermal hot spots	General	Stainless Steel 304/316
	Fire	
	Bracing	
C* and B	General	Hot Dip Galvanised Must comply with the AS/NZS 4680
	Fire	
	Bracing	

* Zone C areas where local knowledge dictates that increased durability is required, appropriate selection shall be made Microclimate conditions as detailed in the NZS 3604, Paragraph 4.2.4 require SED.

6.9 Joints

6.9.1 Vertical Joint

Stria™ Cladding Fine Texture can be jointed using a trimline joint flashing or a vertical joint flashing. Refer to Figures 9 to 10.

A single stud is required when using trimline joint flashing. Refer to Figure 9. 70mm wide timber framing or double studs are required when using vertical joint flashing. Refer Figure 10.

6.9.2 Horizontal Joint

Stria™ Cladding Fine Texture panels are lapped over each other as per Figure 6. There is a 29mm lap between the two panels. Ensure that Stria™ Cladding Fine Texture panels are securely interlocked before nailing. Stria™ Cladding Fine Texture can run continuous over floor joists without any horizontal joint when **LVL timber floor joists or an engineered joist are used.** Refer to Figure 27.

When an engineered joist or LVL joist is not used, a horizontal joint or a movement joint must be formed at floor joist, refer to Figures 28, 29, 35 and 45.

6.9.3 Drainage Joint

After every two floors a horizontal drainage joint flashing is required, refer to Figures 35 and 44.

For buildings higher than 3 storey, from a vertical fire spread safety perspective, a horizontal drainage joint is required at each floor.

6.9.4 External Corner Joint

An external box corner flashing is used to fix the external corners, refer to Figure 11, alternatively a slimline external corner, refer to Figure 12.

Alternatively a Hardie™ Axent™ Trim external boxed corner can also be formed, refer to Figure 13.

Note: All vertically installed joint mouldings to be fixed at 400mm centres both sides.

6.9.5 Internal Corner Joint

Hardie™ 14mm internal corner flashing is to be used to form an internal corner joint, refer to Figure 14. An extra stud is required in internal corners.

Note: All vertically installed joint mouldings to be fixed at 400mm centres both sides.

6.10 Junctions and Penetrations

Refer to Clause 4.3 of this specification for moisture management requirements. All windows and doors must be detailed as per the requirements of this specification. James Hardie has developed the window details for Stria™ Cladding Fine Texture which meet the requirements of E2 External Moisture, an approved document of the NZBC. Refer to Figures 17 to 26, 37 and 42 to 43.

7 Finishes

7.1 Preparation

The jolt head nail must be finished 2mm below the cladding surface. The nail holes must be filled with an exterior grade two part builders fill, ie. CRC® ADOS® Builders Fill or similar two part external grade filler.

The Hardie™ Flex nail heads must finish flush with cladding surface.

It is not recommended to seal gap under the lap of cladding as it helps in circulation of air behind the cladding. However if sealing of the gaps is undertaken, the product warranty still applies.

When filling over a jolt head nail in Stria™ Cladding Fine Texture, the following process can be followed.

1. Wearing appropriate gloves, place filling compound on finger and wipe over jolt head nail hole.
2. If there is excess of filling compound around the nail head, gently wipe away with a moist sponge or cloth before the compound sets.

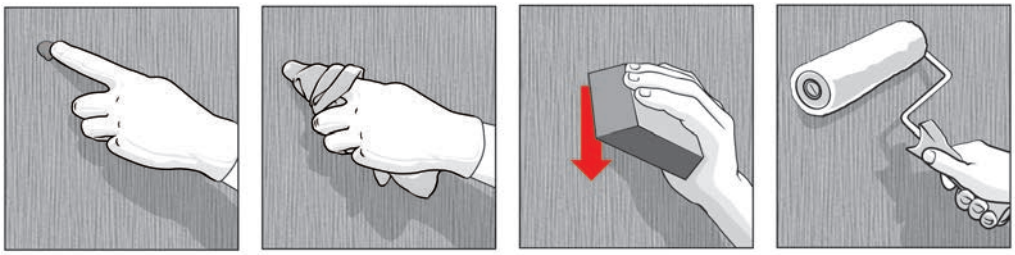

For site applied paint finishes, James Hardie recommends a minimum of two coats of acrylic paint. Follow the paint manufacturer's recommendations to prepare the surface.

For best aesthetic results, a low sheen paint is recommended.

7.2 Painting

Stria™ Cladding Fine Texture is pre-primed and is suitable for site applied acrylic paints.

In order to seal cut edges or sanded patches, Dulux® 1 Step, Resene® Quick Dry, Taubmans® Underproof Acrylic Primer Undercoat or a similar product should be applied. The primer should be compatible with the paint to be used.

Painting of Stria™ Cladding Fine Texture is mandatory to meet the durability requirements of the NZBC and 25 year James Hardie product warranty. Stria™ Cladding Fine Texture must be dry and free of any dust or grime before painting. The cladding must be painted within 90 days of installation. All exposed faces, including the top edges under the sills and bottom edges of Stria™ Cladding Fine Texture and accessories must be finished with an exterior paint system. There is no restriction on the LRV of paint to be applied on the Stria™ Cladding Fine Texture.

James Hardie recommends a minimum of two coats of exterior grade acrylic paint. Follow the paint manufacturer's recommendations to prepare the surface and to adequately cover and conceal the cladding fixings.

For the best aesthetic results a low sheen paint is recommended.

7.3 Flexible Sealant

Sealant used must comply with the relevant requirements of the NZBC. Their application and usage must be in accordance with the manufacturer's instructions. Check with the sealant manufacturer prior to coating over sealant. Some sealant manufacturers do not recommend coating over their product.

8 Care and Maintenance

The extent and nature of maintenance required will depend on the geographical location and exposure of the building. Refer to Section 2.2 of E2/AS1 and Section 2.2 of B2/AS1 for essential maintenance requirements for claddings to achieve the required durability of materials and components etc.

As a guide, it is recommended that the basic normal maintenance tasks for Stria™ Cladding shall include, but not be limited to:

- Washing down exterior surfaces every 6 - 12 months using low pressure water and a brush, and every 3-4 months in extreme coastal conditions or sea spray zones. Do not use a water blaster to wash down the cladding. Refer to your paint manufacturer for washing down requirements
- Re-coating exterior protective finishes. Always refer to your paint manufacturer for re-coating requirements
- Regular inspection and repair if necessary of the cladding joints, sealants, fillers, flashings etc
- Cleaning out gutters, down pipes and overflow pipes as required
- Pruning back vegetation which is close to or touching the Stria™ Cladding
- Remove any snow or ice build up that is in direct contact with the cladding for extended periods
- The clearance between the bottom edge of the Stria™ Cladding and the finished/unfinished ground must always be maintained eg. around concrete paths/driveways etc 100mm minimum and natural ground/pebbles etc 175mm minimum

9 Details Section Index

Description	Page
Figure 1: Stria™ Cladding Fine Texture layout	24
Figure 2: Vertical joint layout	25
Figure 3: Foundation detail – option 1	26
Figure 4: Foundation detail – option 2	27
Figure 5: Enclosed deck	28
Figure 6: Cladding fixing up to VH wind zone with flexible underlay	29
Figure 7: Cladding fixing up to VH wind zone with rigid air barrier	30
Figure 8: Cladding fixing up to EH wind zone	31
Figure 9: Vertical trimline joint flashing option	32
Figure 10: Vertical joint flashing option	33
Figure 11: External aluminium box corner	34
Figure 12: External Slimline aluminium corner	35
Figure 13: External trim box corner	36
Figure 14: Internal aluminium corner	37
Figure 15: Soffit detail	38
Figure 16: Nil soffit detail	39
Figure 17: Window sill	40
Figure 18: Window jamb	41
Figure 19: Window jamb with scriber	42
Figure 20: Window head with cladding across head flashing	43
Figure 21: Window head with cladding cut around	44
Figure 22: Window head stop end	45
Figure 23: Window sill with facings	46
Figure 24: Window jamb with facings	47
Figure 25: Window head with facings	48
Figure 26: Door sill support detail	49
Figure 27: Continuous cladding over floor joist	50
Figure 28: Trimline Horizontal joint at floor joist level	51
Figure 29: Trimline joint flashing below floor joists	52
Figure 30: Trimline joint flashing	53
Figure 31: Trimline joint flashing at external corner - Option A	54
Figure 32: Trimline joint flashing at external corner - Option B	55
Figure 33: Joining moulding	56
Figure 34: Trimline joint flashing at internal corner	57
Figure 35: Drained flashing joint at floor level	58
Figure 36: Drained flashing joint at external corner	59
Figure 37: Pipe penetration	60
Figure 38: Apron Flashing Detail	61
Figure 39: Parapet flashing	62
Figure 40: Enclosed deck balustrade to wall junction isometric	63
Figure 41: Roof to wall junction detail	64
Figure 42: Garage door head	65
Figure 43: Garage door jamb	66
Figure 44: Cavity batten setout building height over 10m or different fire cells	67
Figure 45: Cavity fire barrier for heights over 10m or different fire cells	68

For all meter box details please visit our website at **www.jameshardie.co.nz** or Ask James Hardie™ on **0800 808 868**.

Figure 1: Stria™ Cladding Fine Texture layout

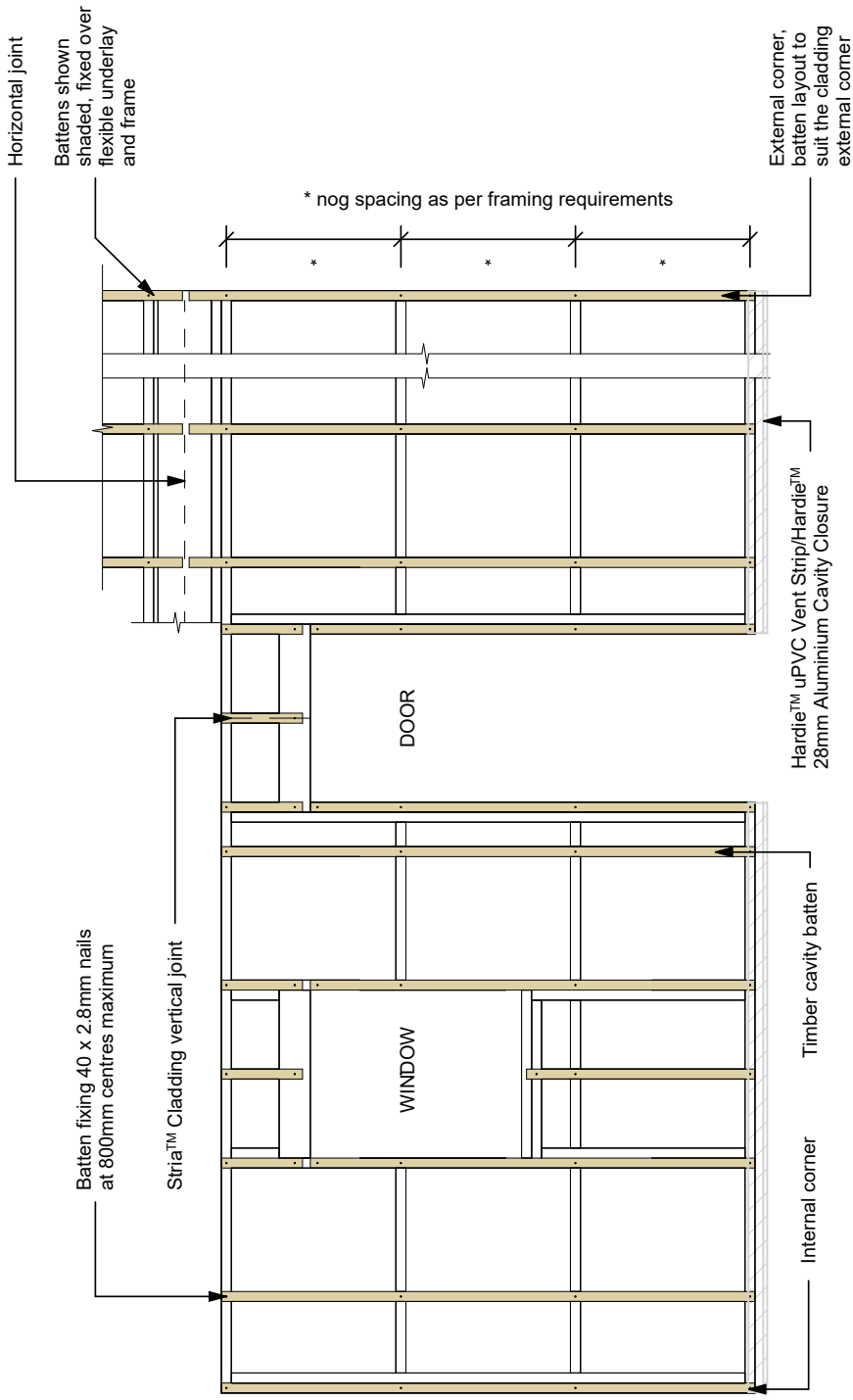

Note:

- Maximum stud spacing at 600mm centres
- Cavity must not vent into roof space
- The intermediate support for insulation between the studs could be a timber cavity batten, polypropylene tape or 75 mm galvanised wire mesh. Refer to E2/AS1 Paragraph 9.1.7.10 Polypropylene tape must be fixed horizontally and drawn taut at 300 mm centres.

Figure 2: Vertical joint layout

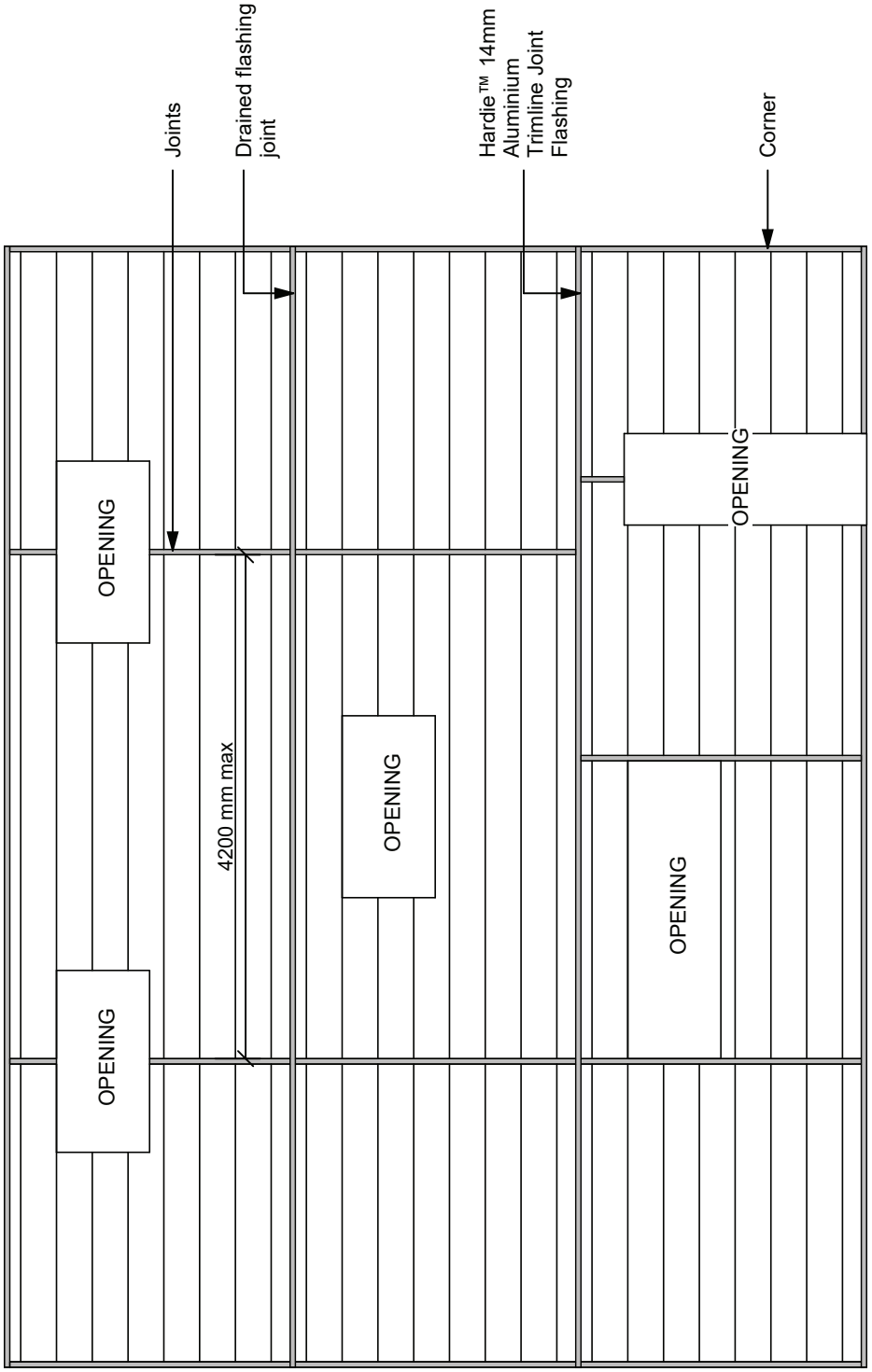

- Maximum stud spacing 600mm centres

Figure 3: Foundation detail – option 1

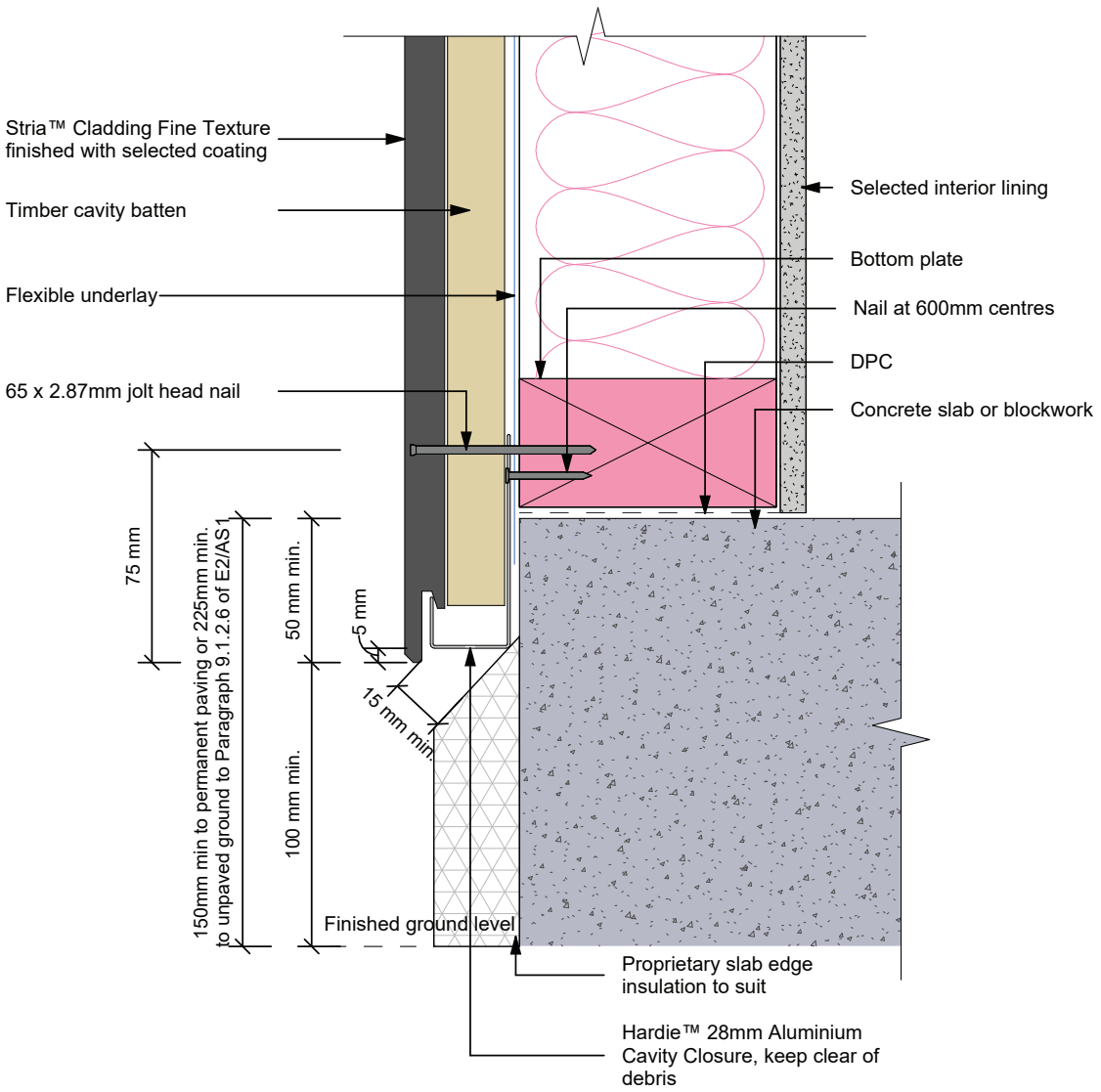

Note: Site cut edges to be primed

Figure 4: Foundation detail – option 2

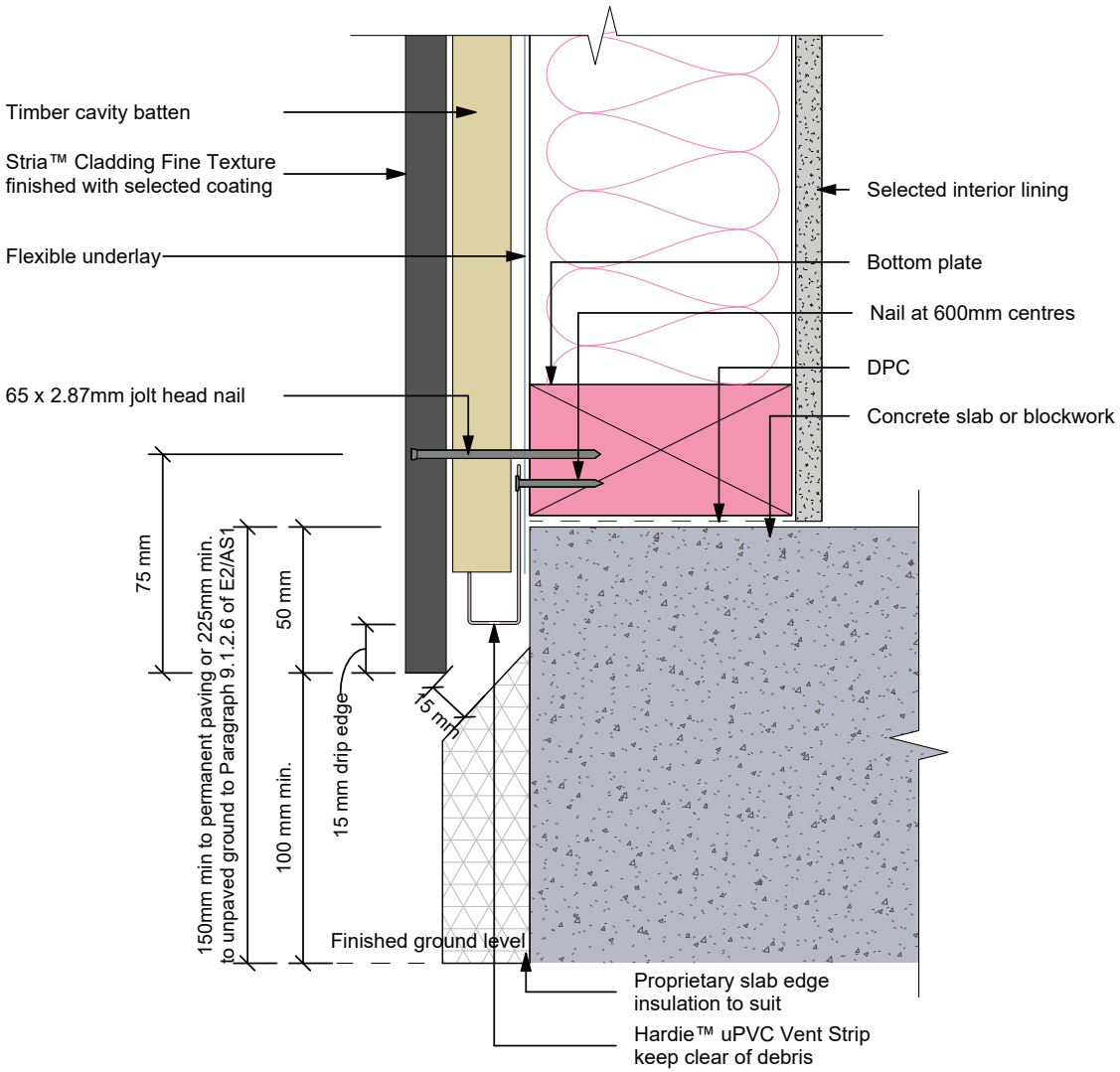

Note: Site cut edges to be primed

Figure 5: Enclosed deck

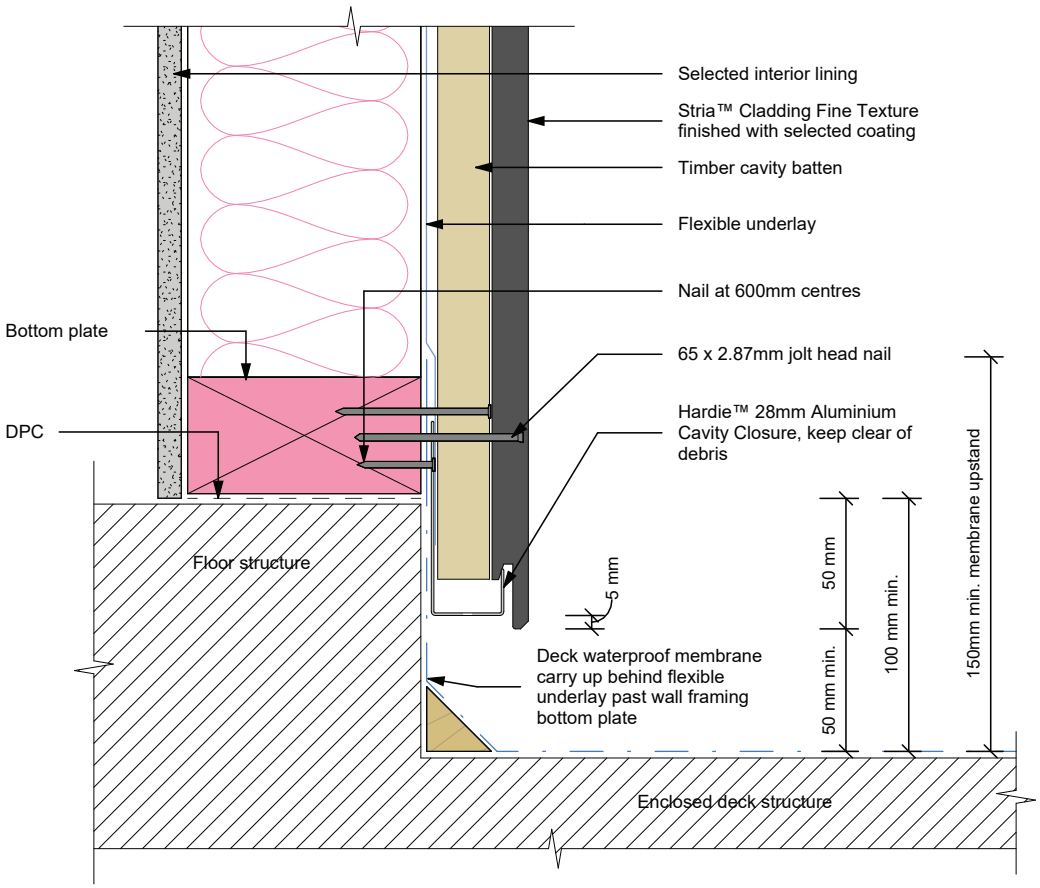

Figure 6: Cladding fixing up to VH wind zone with flexible underlay

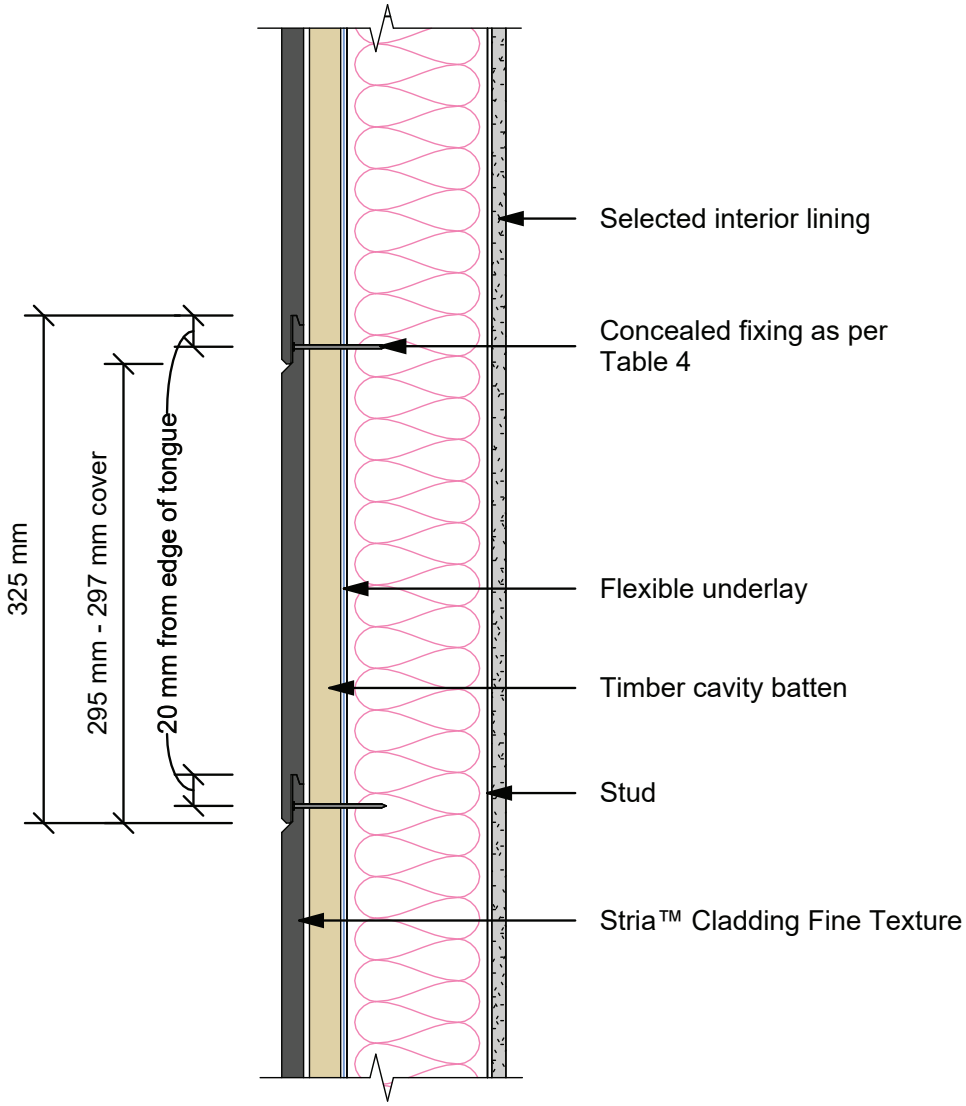

Figure 7: Cladding fixing up to VH wind zone with rigid air barrier

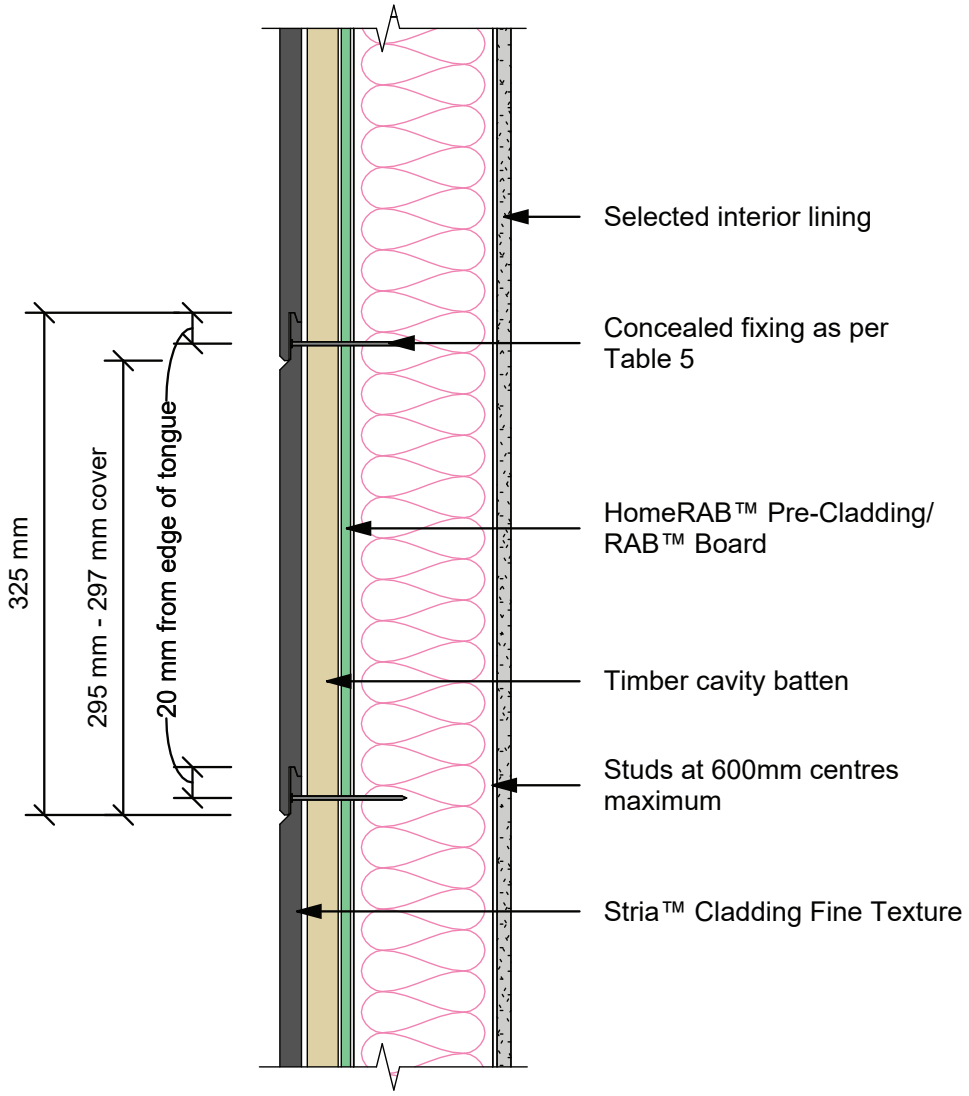

Figure 8: Cladding fixing up to EH wind zone

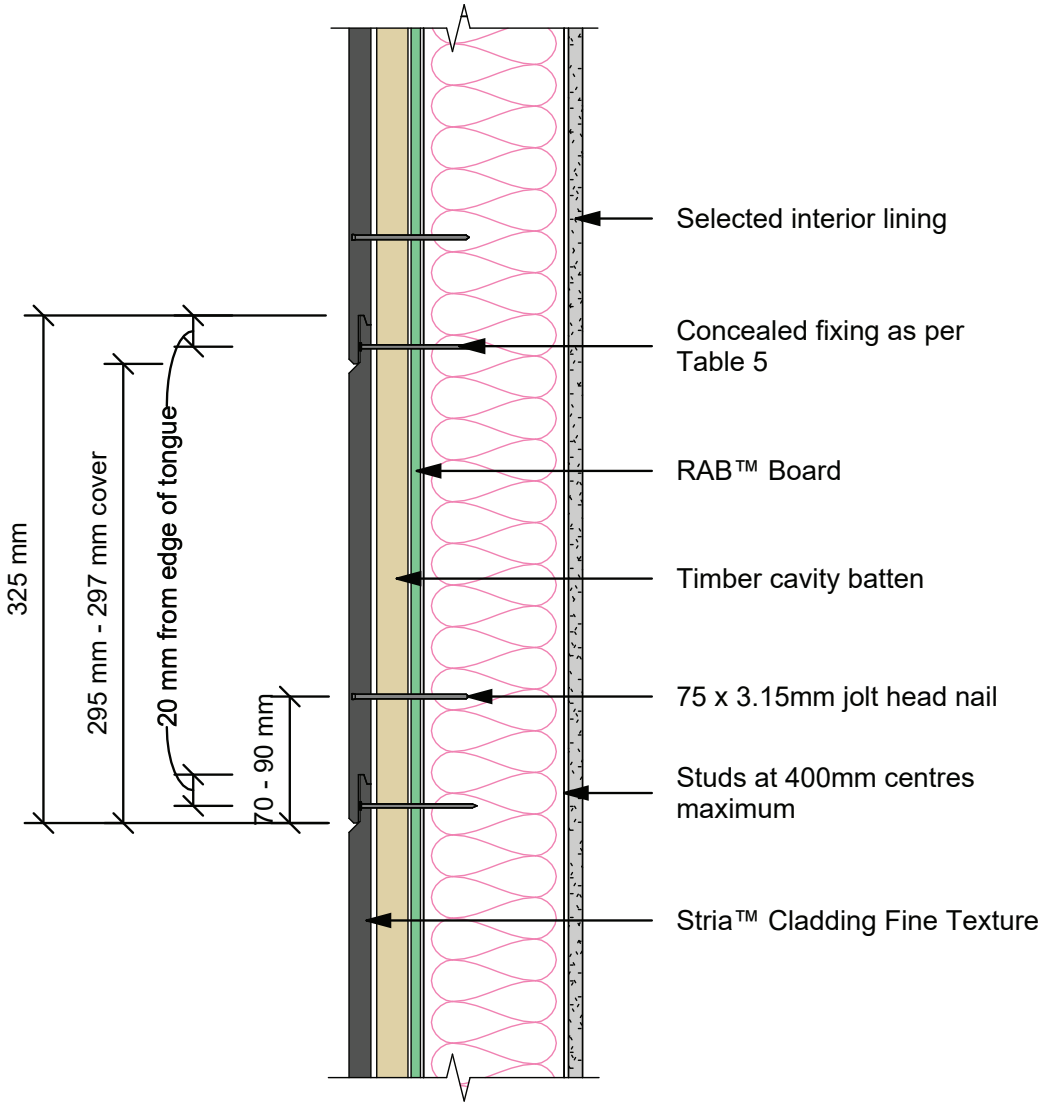

Figure 9: Vertical trimline joint flashing option

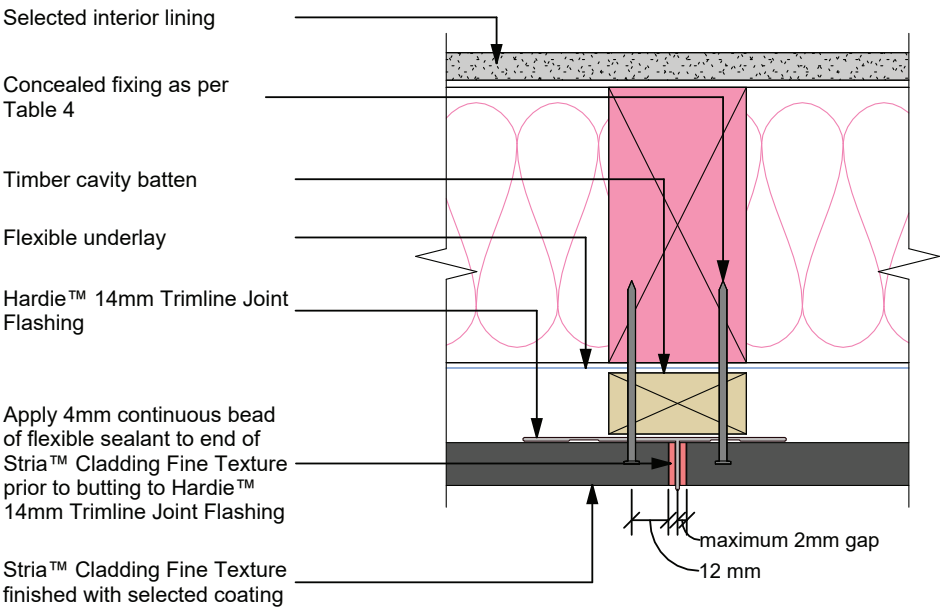

Note: Site cut edges to be primed

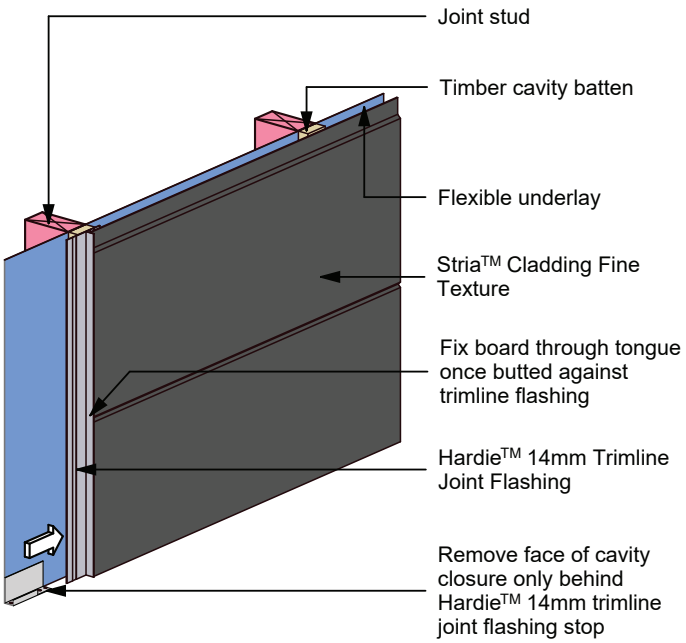

Figure 10: Vertical joint flashing option

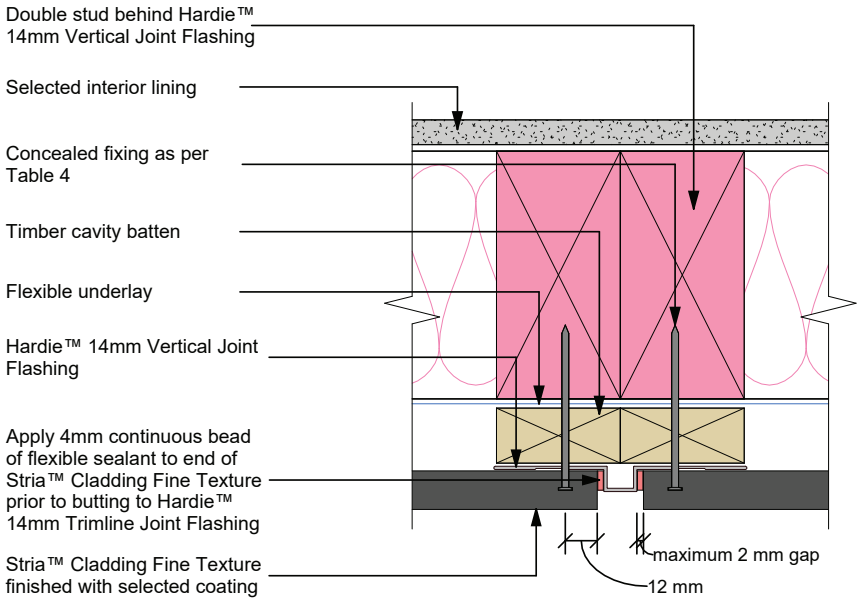

Note: Site cut edges to be primed

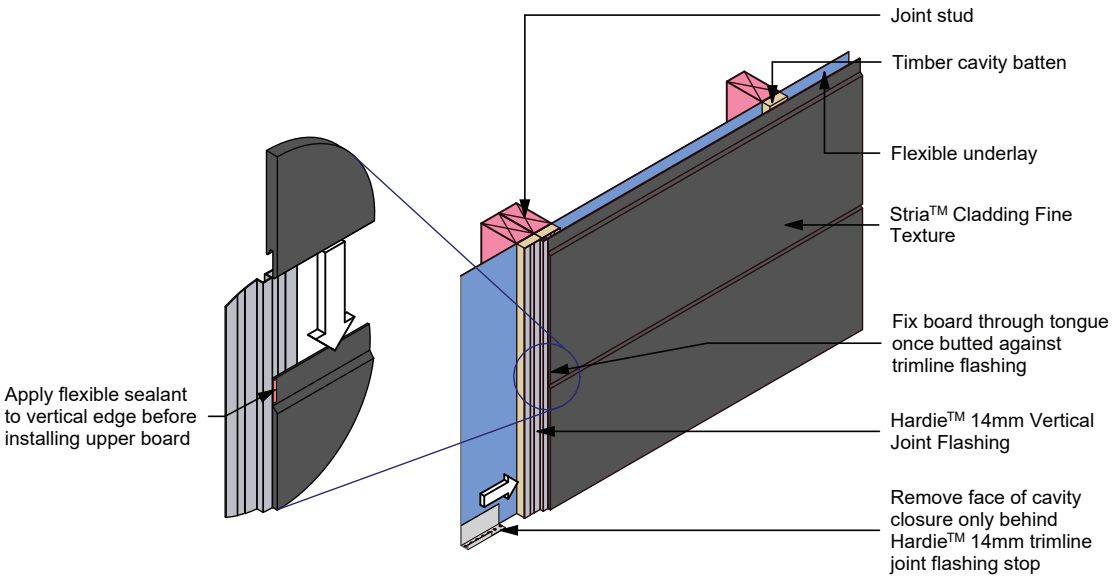

Figure 11: External aluminium box corner

interactive assembly instructions available

http://wksp.nz/jh-str-fhexc

Get **WORKING**SPEC from Apple App Store/Google Play

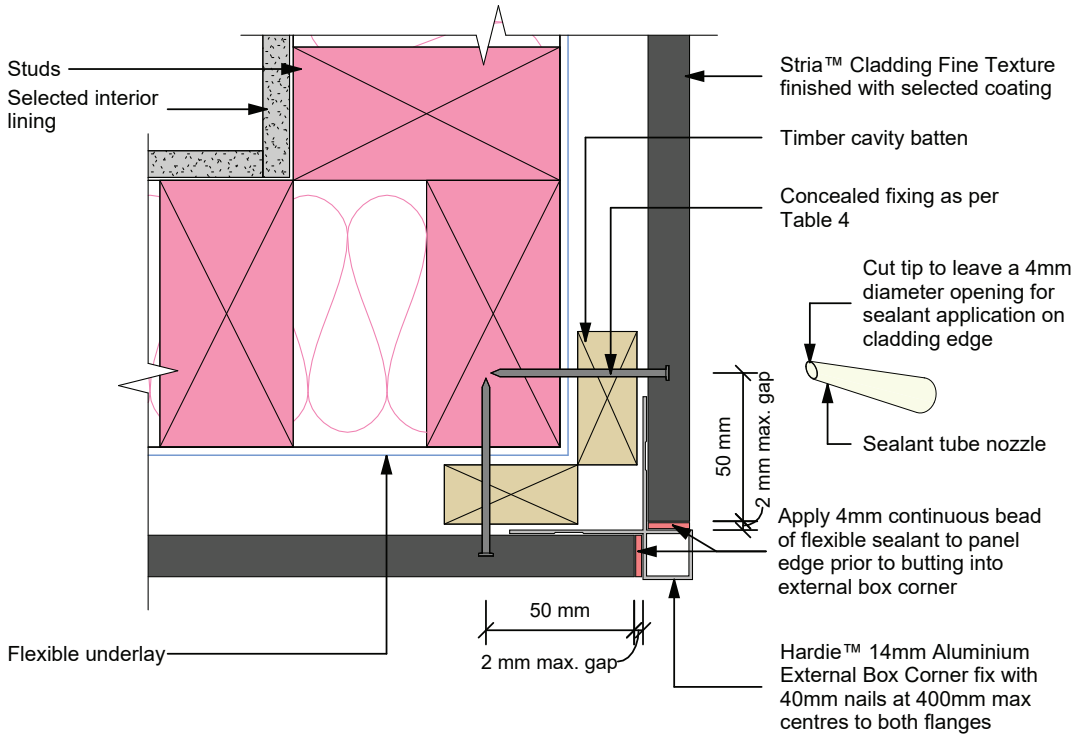

Note: Site cut edges to be primed

Figure 12: External Slimline aluminium corner

interactive assembly instructions available

http://wksp.nz/jh-str-fhex2

Get **WORKING**SPEC from Apple App Store/Google Play

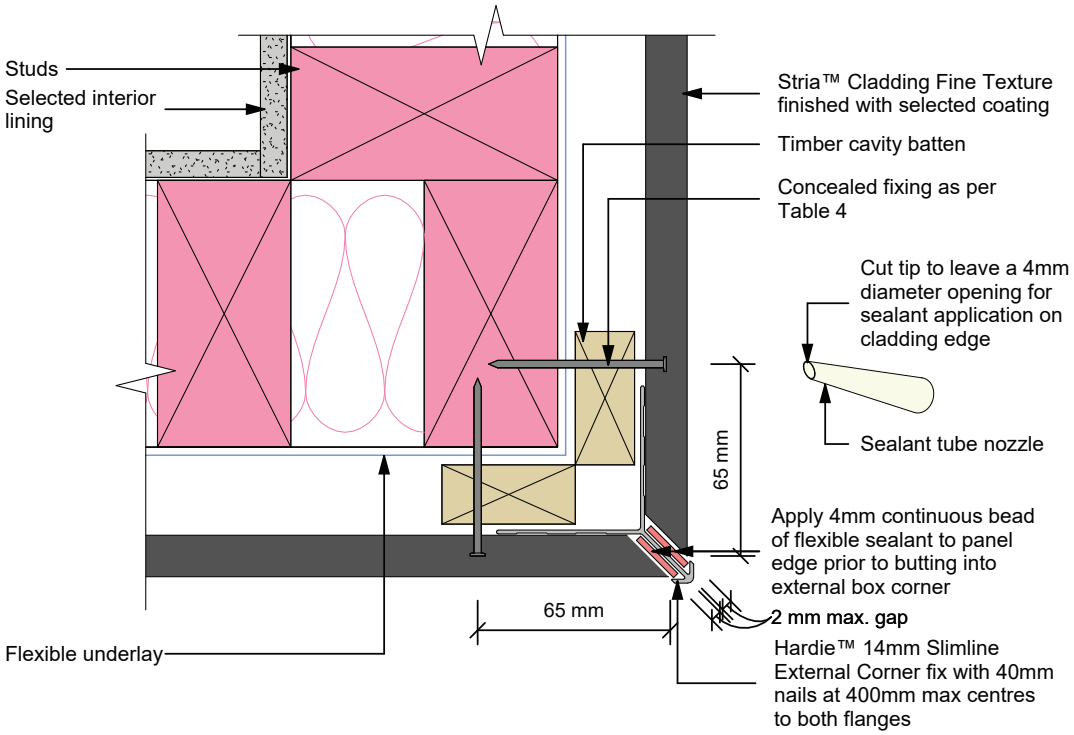

Note: Site cut edges to be primed

Figure 13: External trim box corner

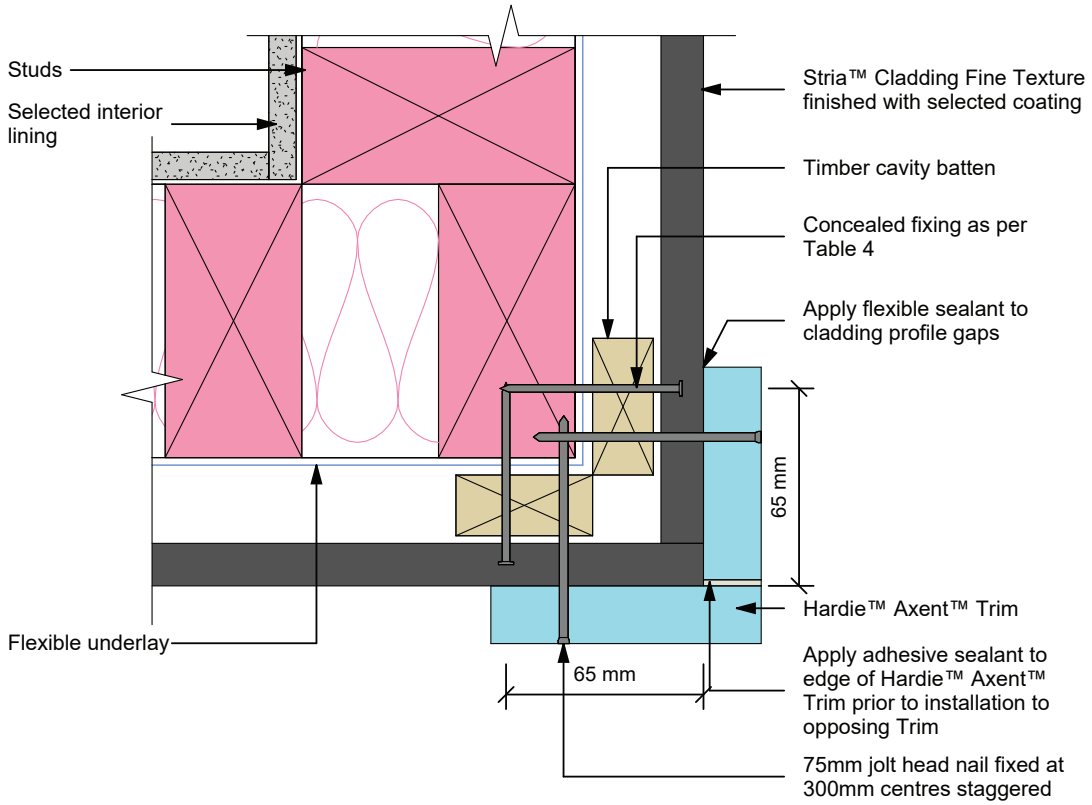

Note: Site cut edges to be primed

Figure 14: Internal aluminium corner

Interactive assembly instructions available

http://wksp.nz/jh-str-fhinc

Get **WORKING**SPEC from Apple App Store/Google Play

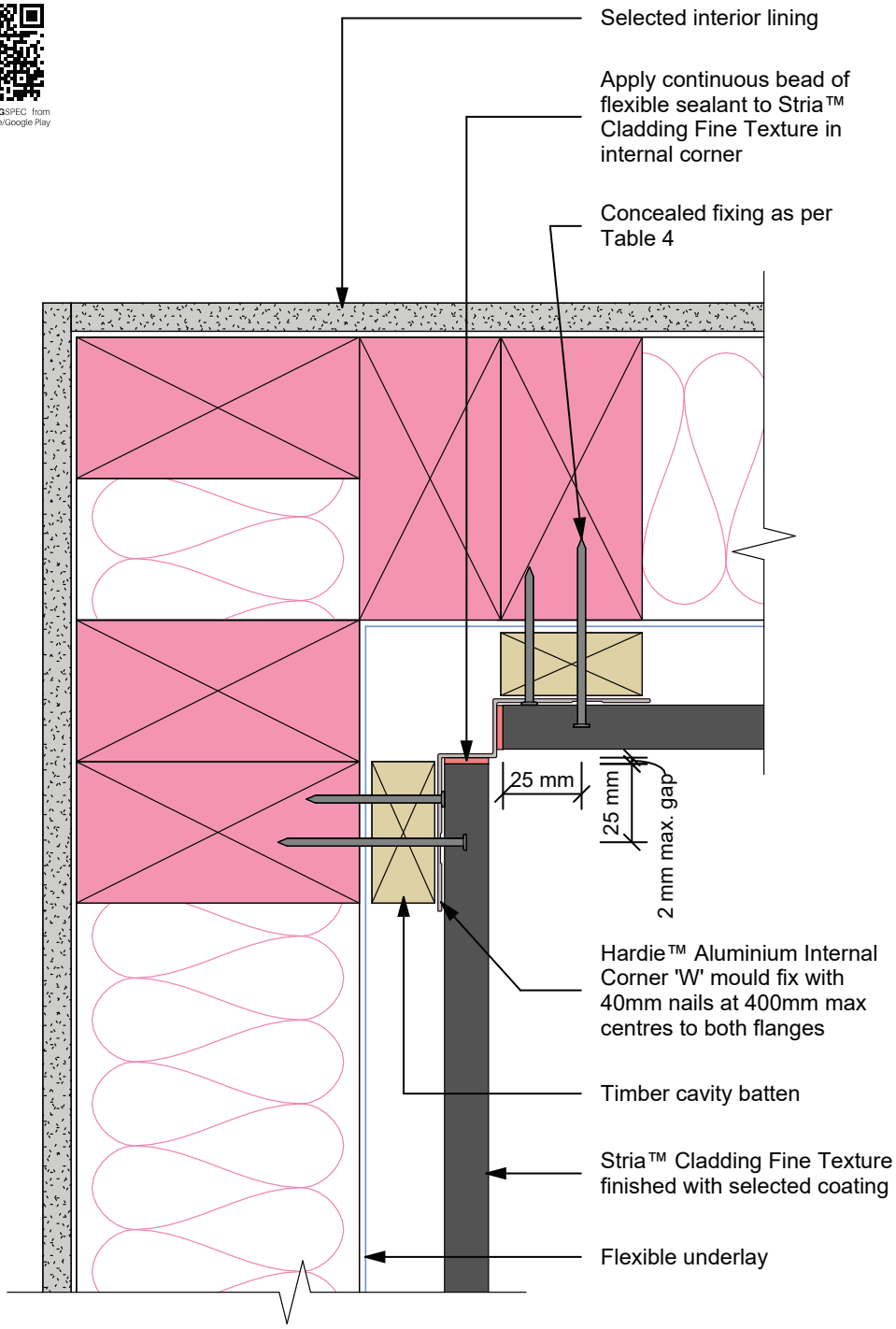

Note: Site cut edges to be primed

Figure 15: Soffit detail

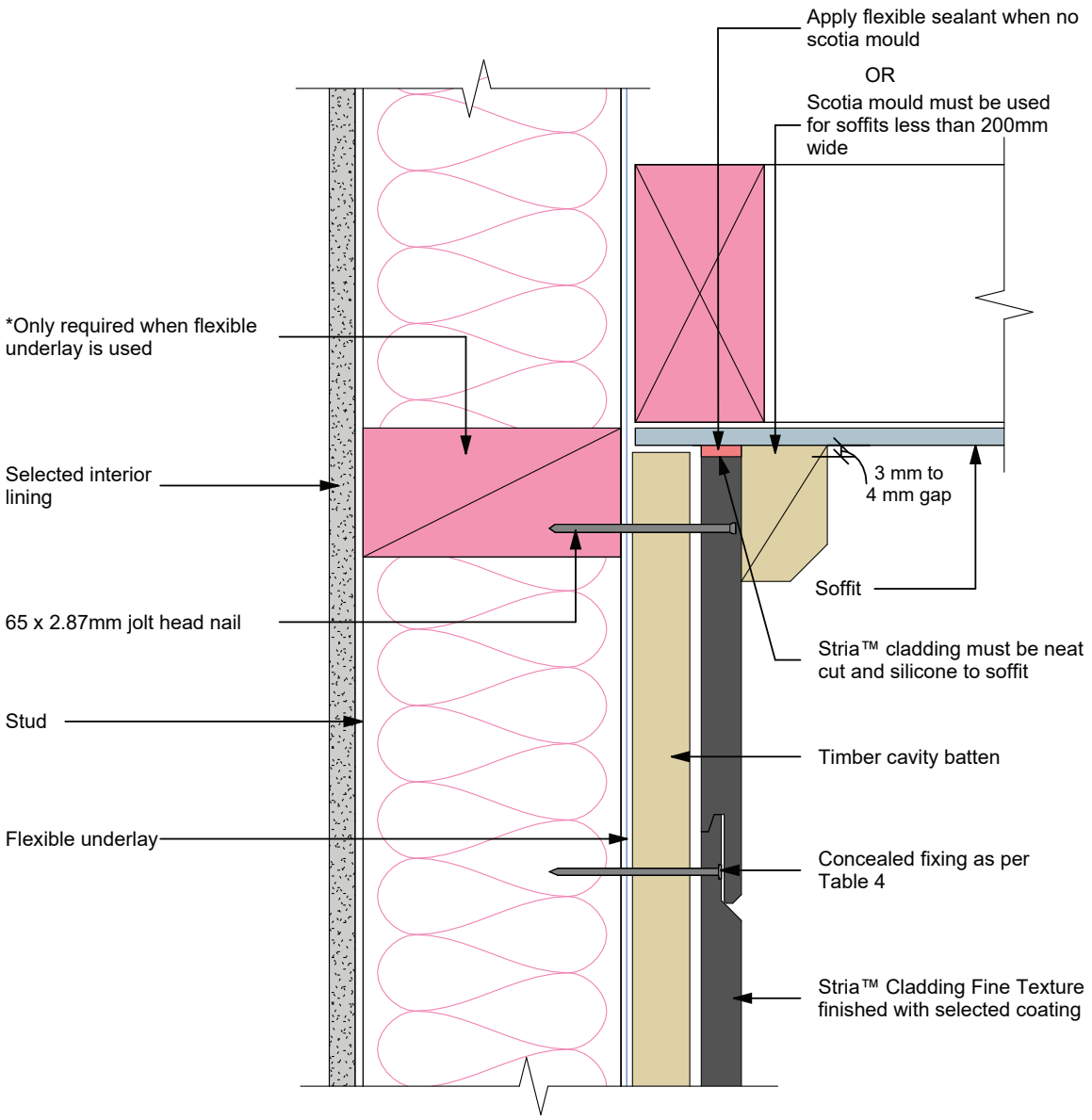

Note:
- Site cut edges to be primed

Figure 16: Nil soffit detail

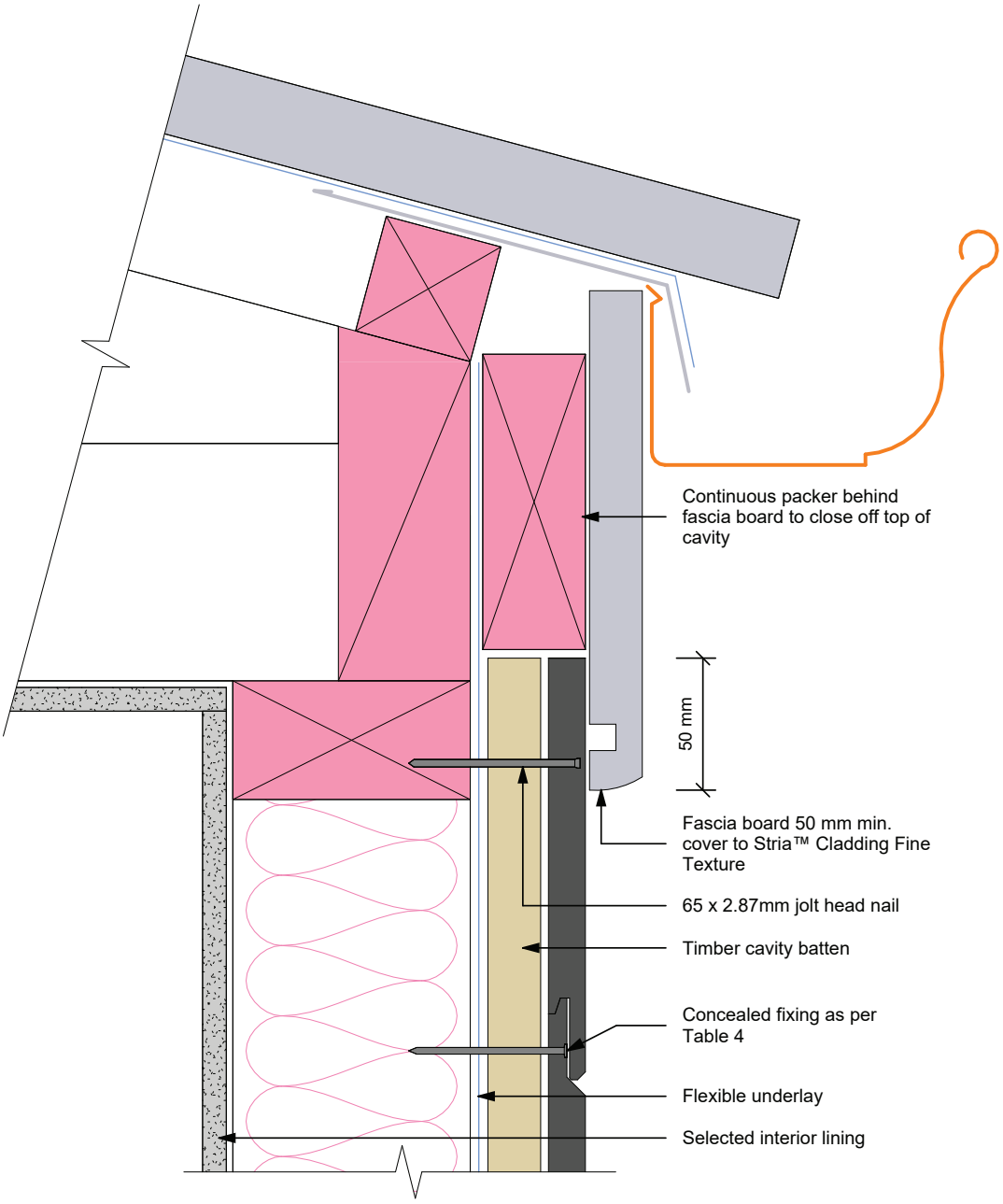

Figure 17: Window sill

interactive assembly instructions available

http://wksp.nz/jh-str-fhwin

Get **WORKING**SPEC from Apple App Store/Google Play

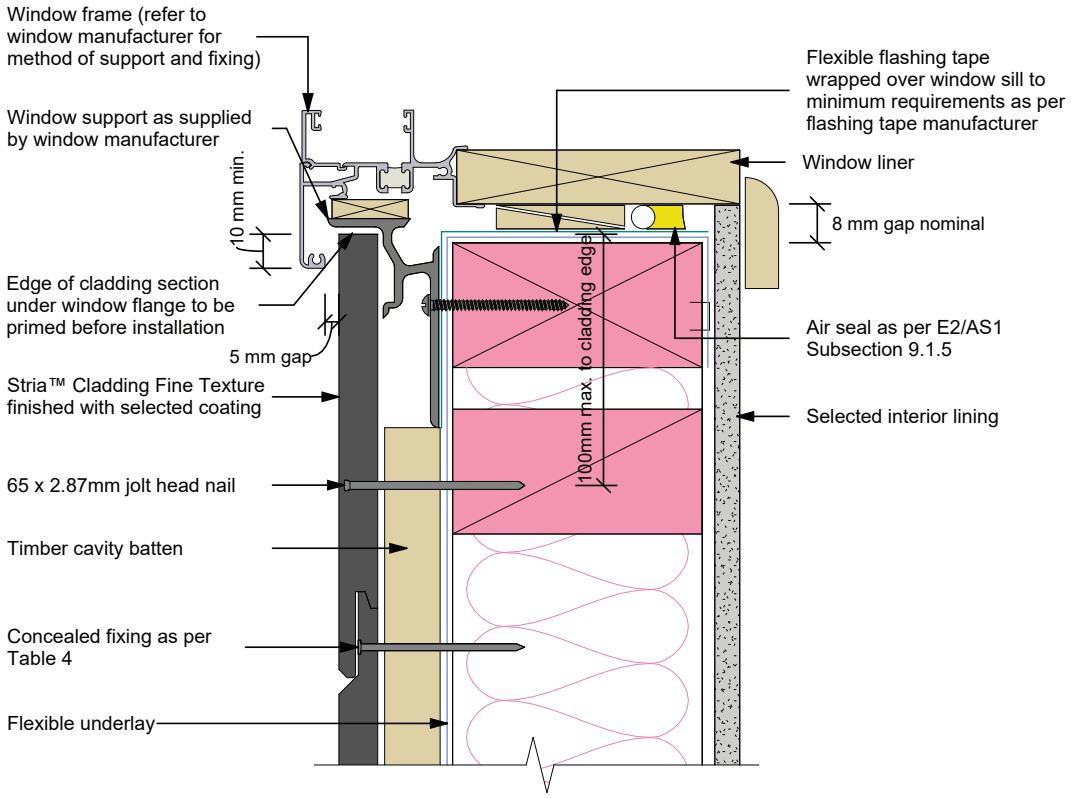

General notes

1. Flashing materials must be selected based on environmental exposure, refer to the NZS 3604 and Table C.1.1.1A of the NZBC E2/AS1
2. Flexible underlay must comply with acceptable solution E2/AS1
3. Flashing tape must have proven compatibility with the selected flexible underlay and other materials with which it comes into contact
4. When HomeRAB™ Pre-Cladding/RAB™ Board is used flashing tape to be applied to the entire window opening
5. Site cut edges to be primed
6. When using scribers by the jamb, the gap between joinery and cladding at the jamb and sill can be nil

Figure 18: Window jamb

interactive assembly instructions available

http://wksp.nz/jh-str-fhwin

Get WORKINGSPEC from Apple App Store/Google Play

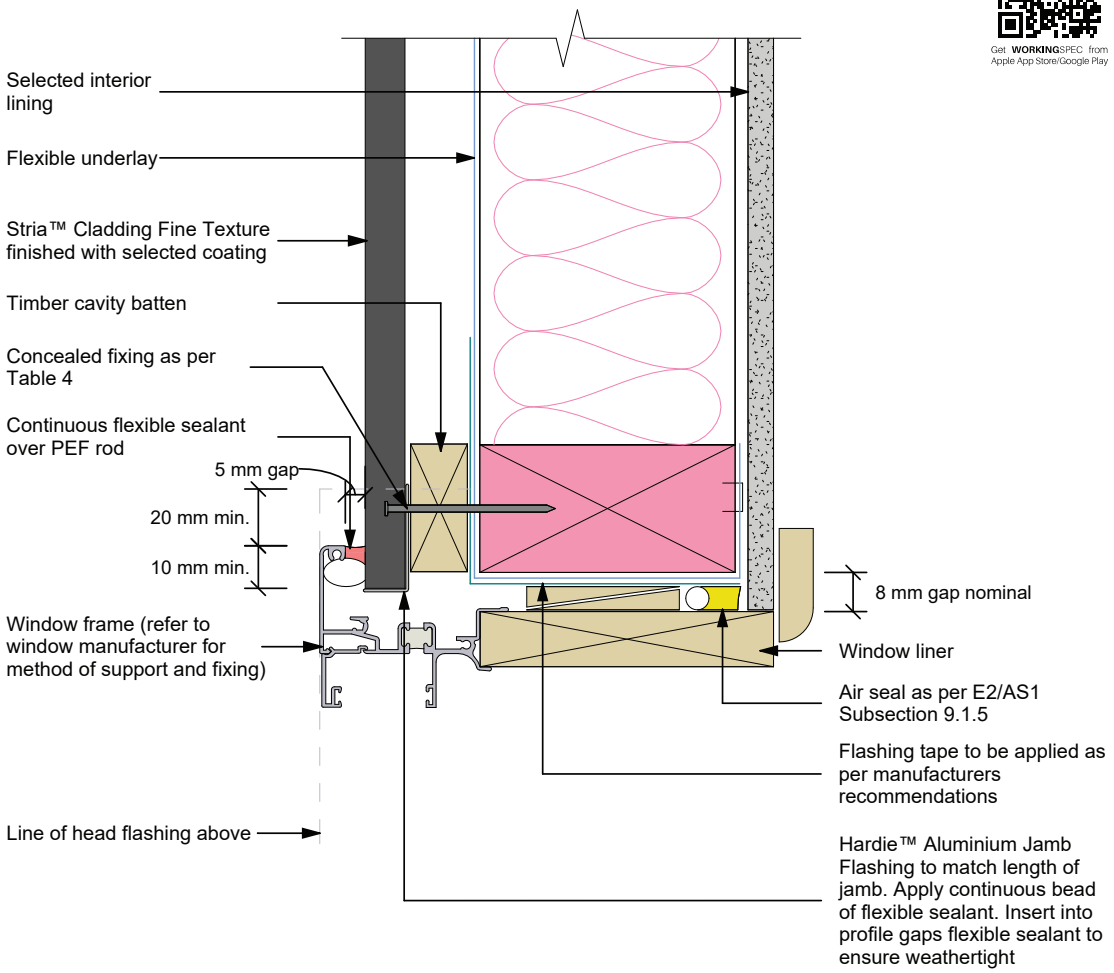

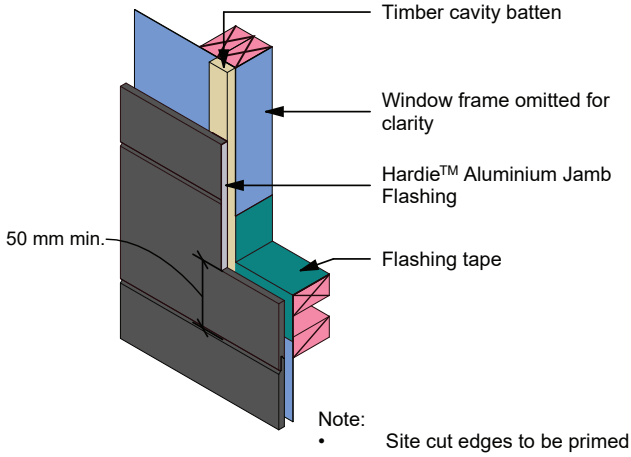

Note:
- Site cut edges to be primed

Figure 19: Window jamb with scriber

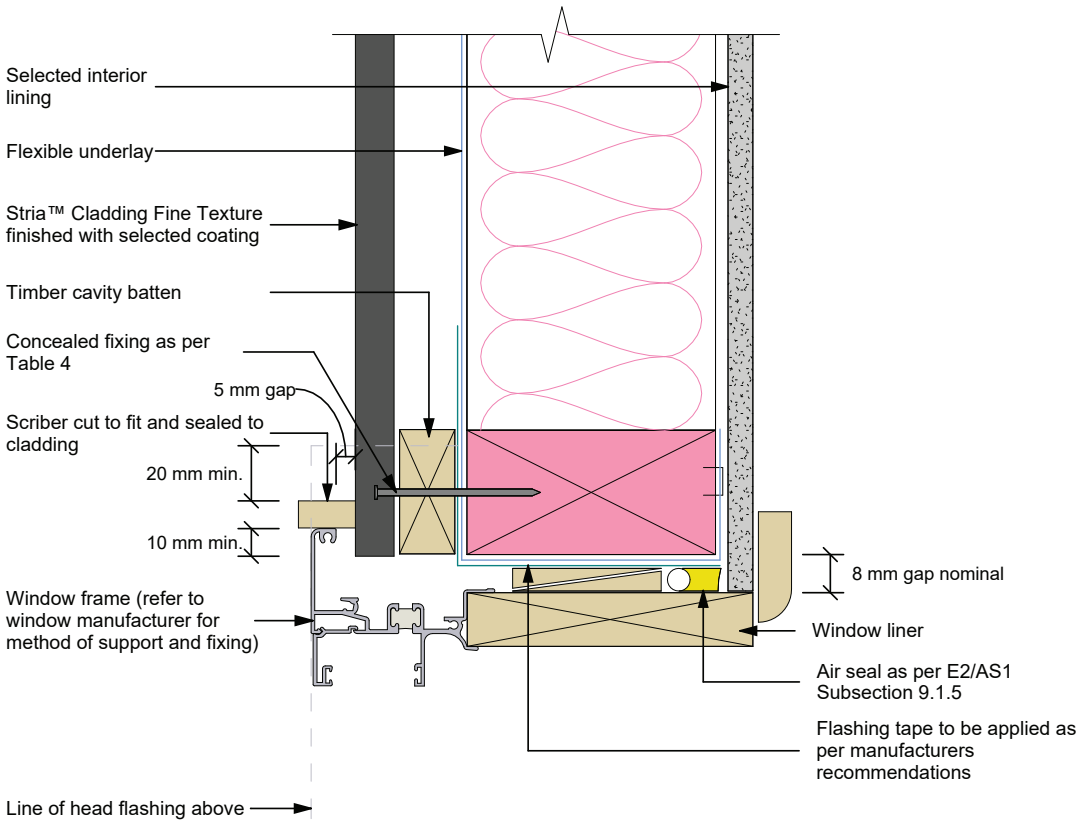

Notes:
- Site cut edges to be primed
- When using scribers by the jamb, the gap between joinery and cladding at the jamb and sill can be nil

Figure 20: Window head with cladding across head flashing

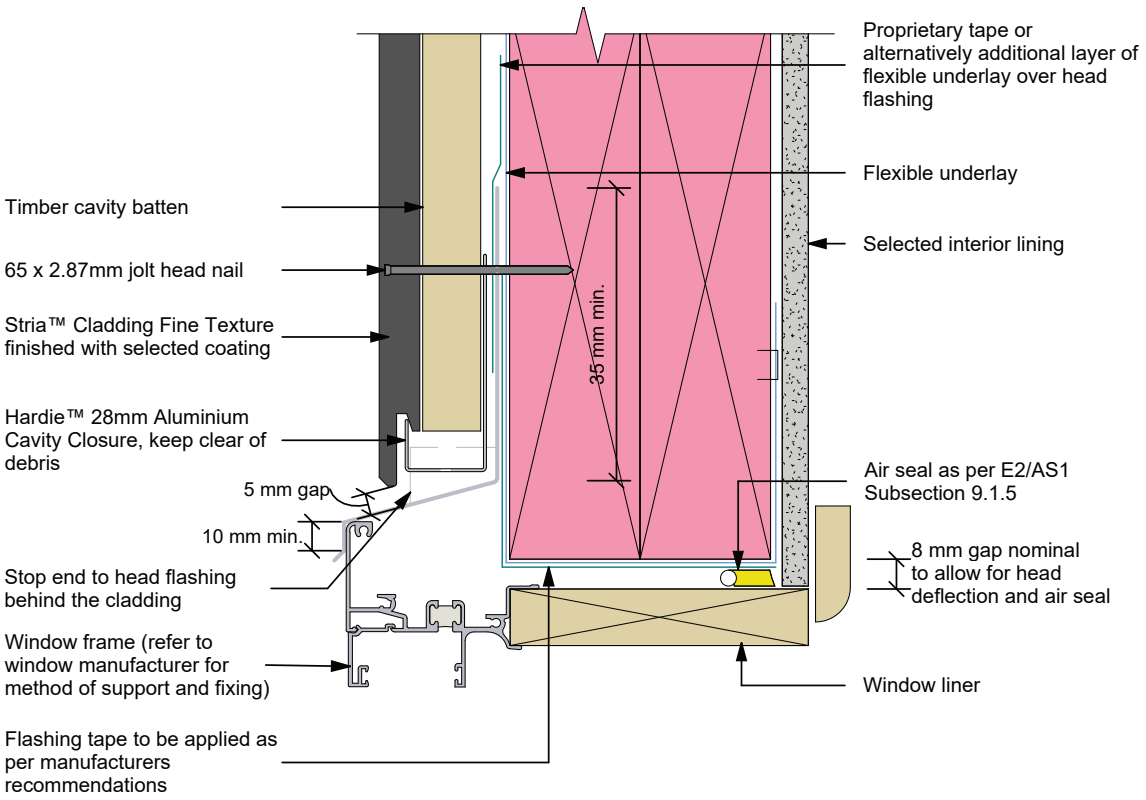

Note:
1. Site cut edges to be primed
2. Sealant must be installed between head flashing and window flange in VH and above wind zones. Refer to Figure 9.1.10.1 of E2/AS1

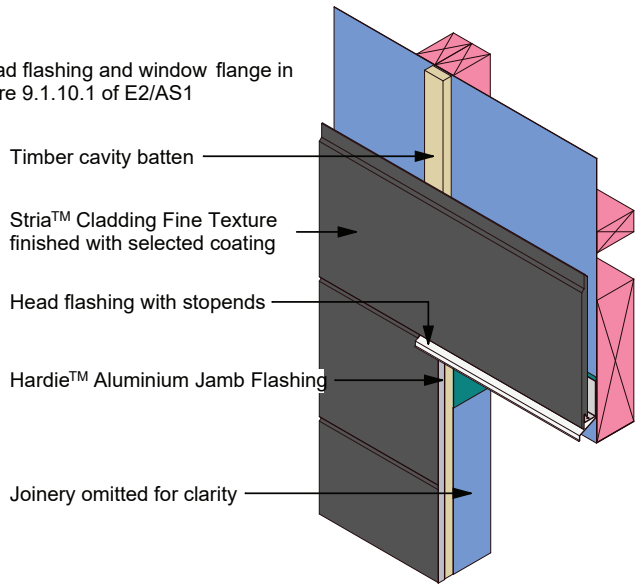

Figure 21: Window head with cladding cut around

interactive assembly instructions available

http://wksp.nz/jh-str-fhwin

Get WORKINGSPEC from Apple App Store/Google Play

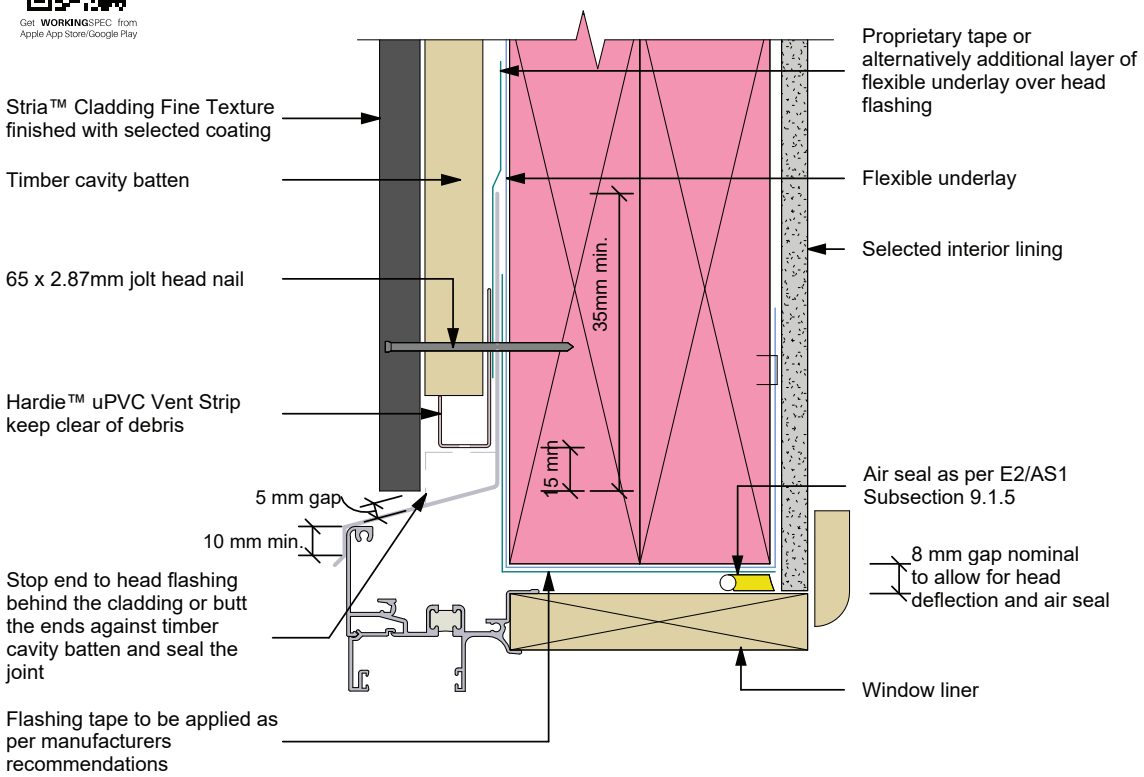

Note:
1. Site cut edges to be primed
2. Sealant must be installed between head flashing and window flange in VH and above wind zones. Refer to Figure 9.1.10.1 of E2/AS1

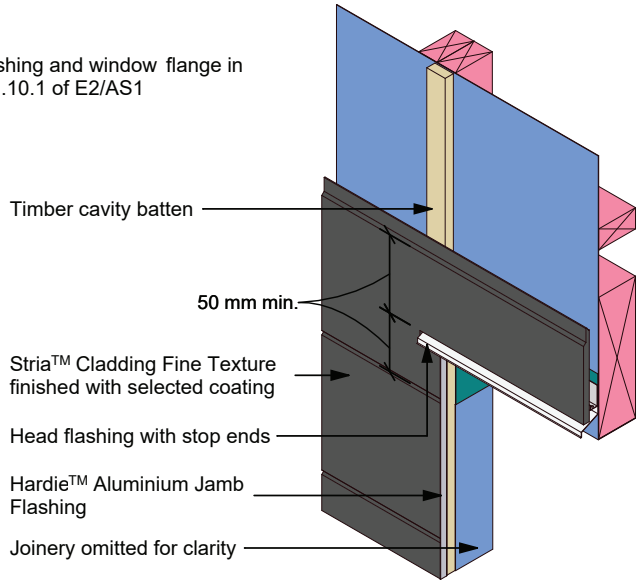

Figure 22: Window head stop end

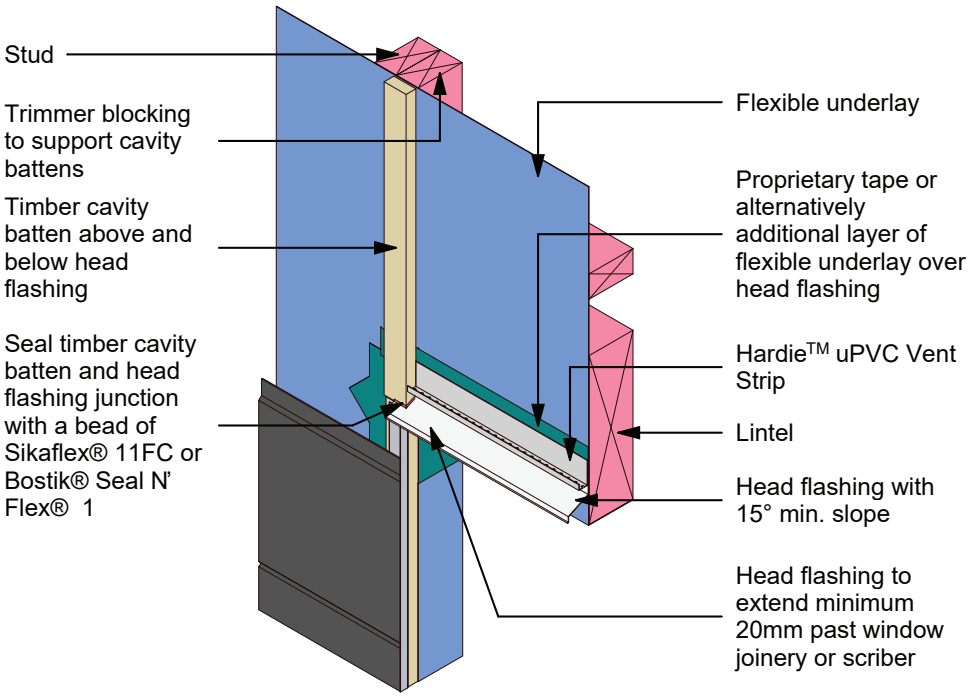

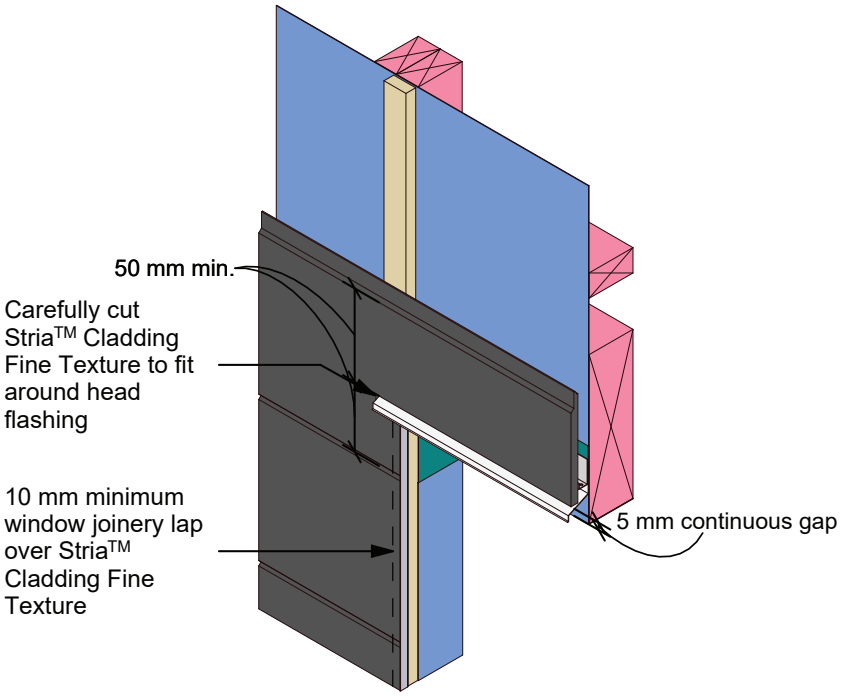

Note: Site cut edges to be primed

Figure 23: Window sill with facings

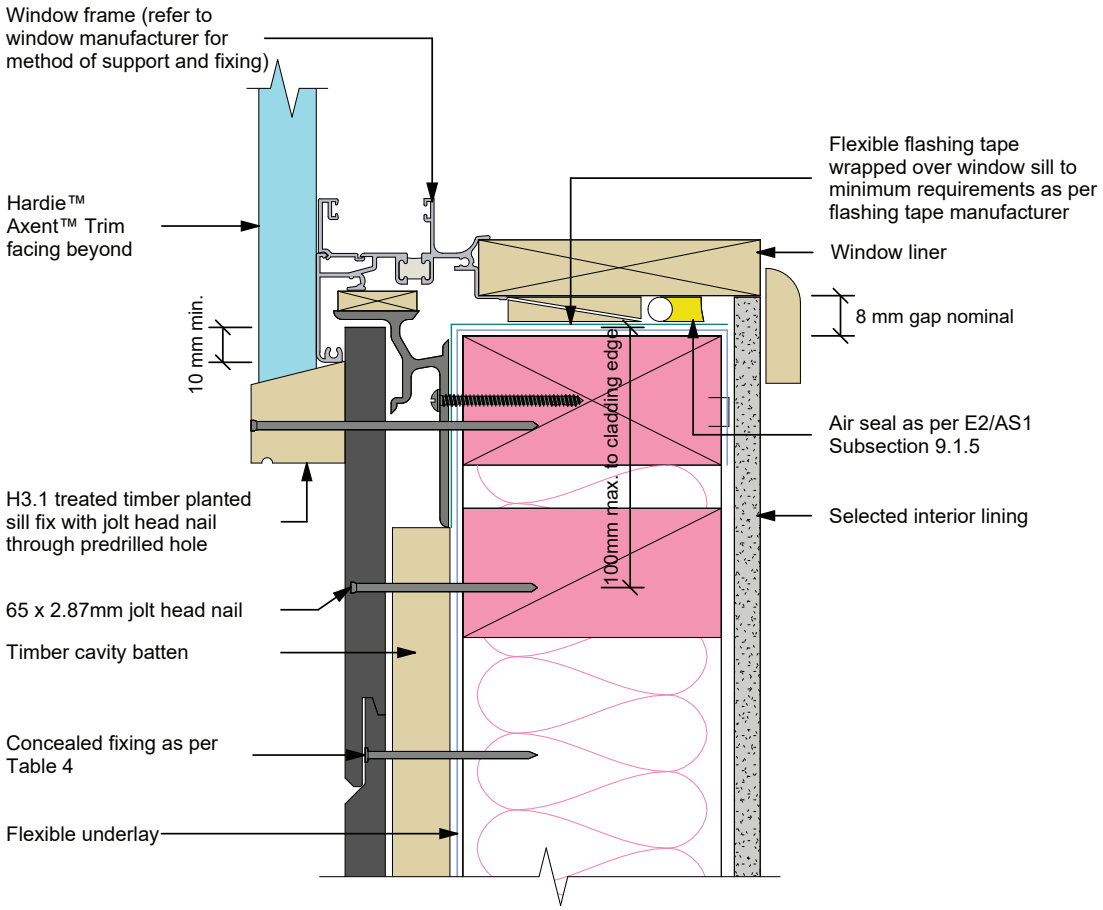

General notes

1. Flashing materials must be selected based on environmental exposure, refer to the NZS 3604 and Table C.1.1.1A of the NZBC E2/AS1
2. Flexible underlay must comply with acceptable solution E2/AS1
3. Flashing tape must have proven compatibility with the selected flexible underlay and other materials with which it comes into contact
4. When HomeRAB™ Pre-Cladding/RAB™ Board is used flashing tape to be applied to the entire window opening
5. Site cut edges to be primed

Figure 24: Window jamb with facings

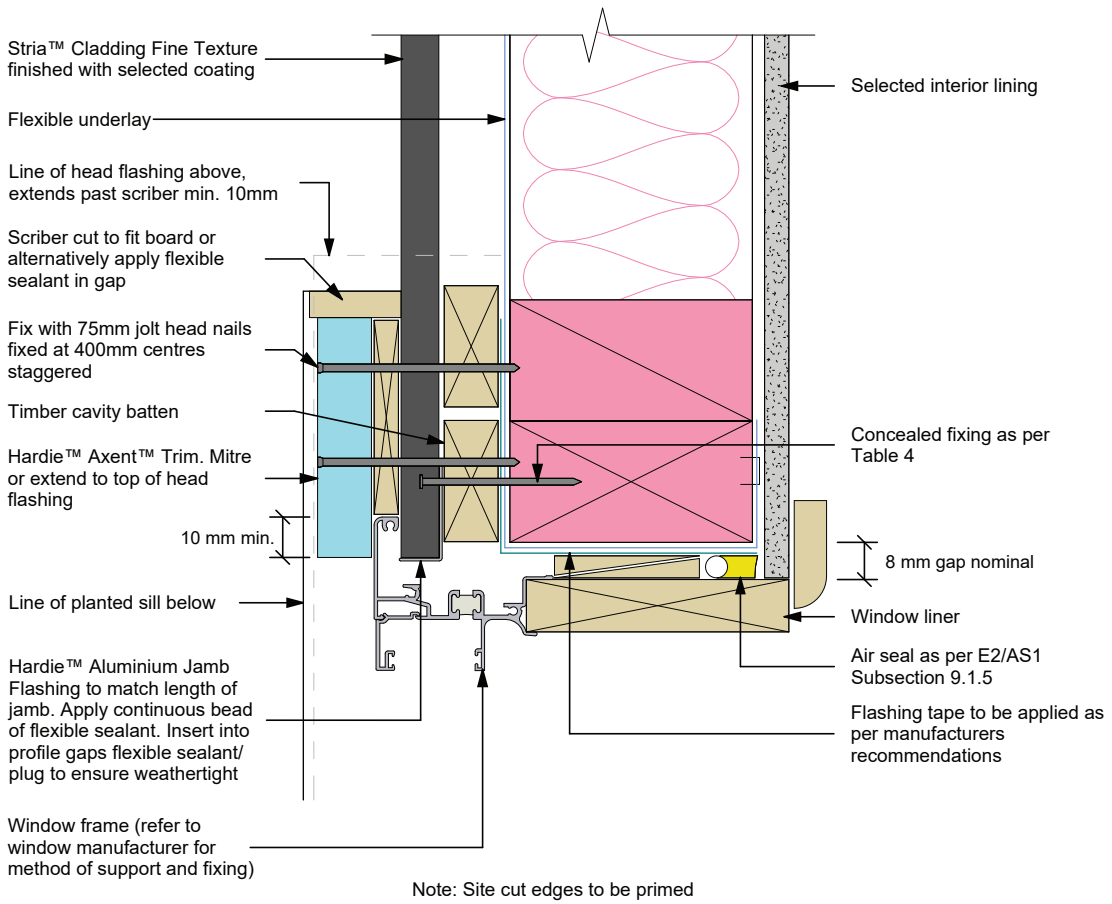

Note: Site cut edges to be primed

Figure 25: Window head with facings

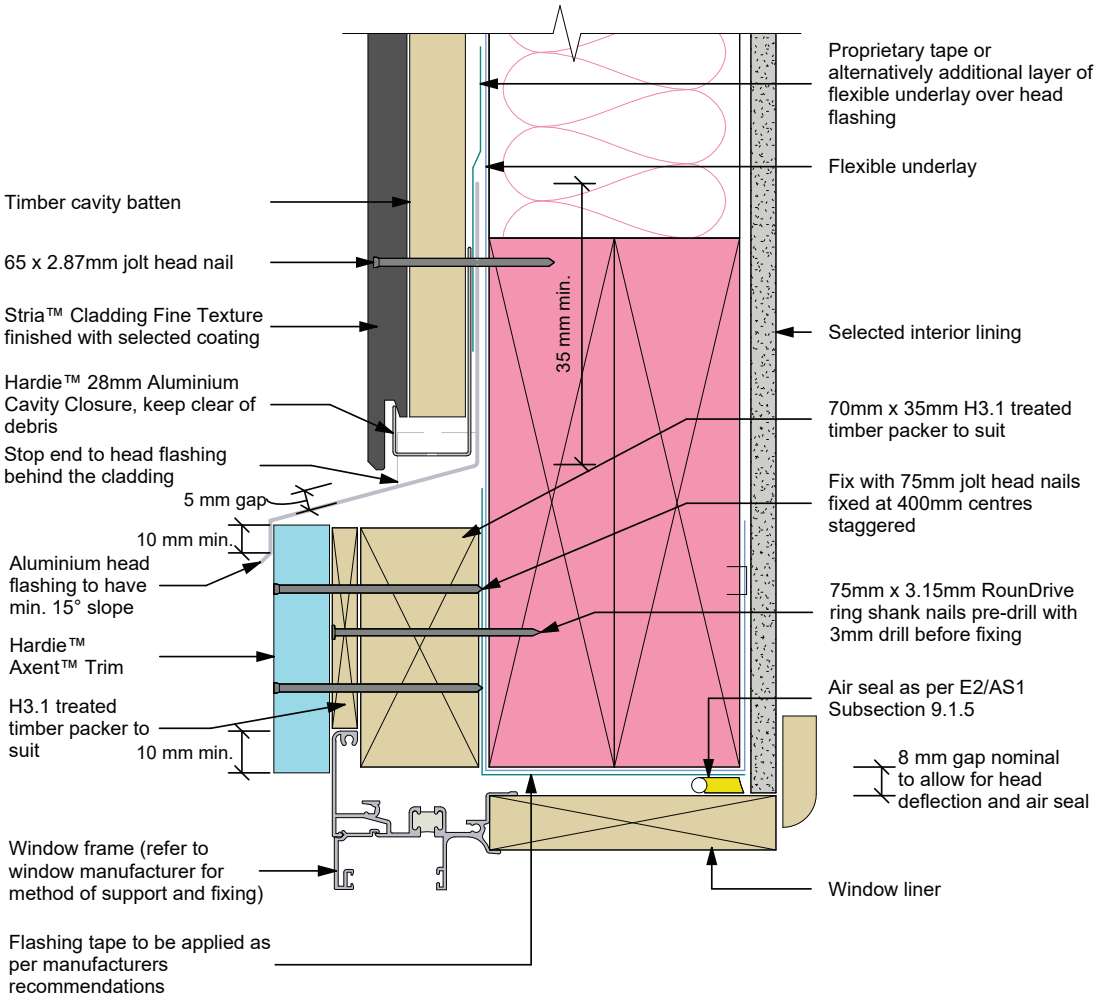

Note:
1. Site cut edges to be primed
2. Sealant must be installed between head flashing and window flange in VH and above wind zones. Refer to Figure 9.1.10.1 of E2/AS1

Figure 26: Door sill support detail

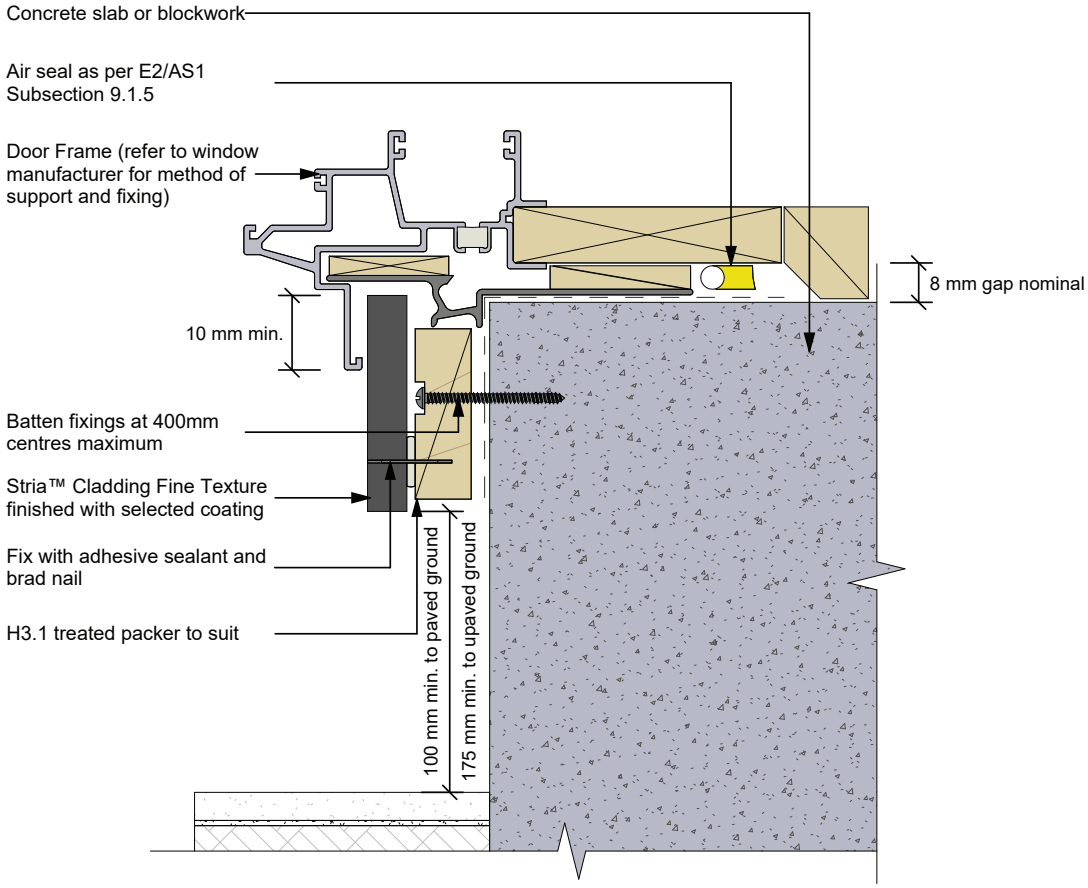

Notes:
- Site cut edges to be primed
- Flexible underlay must comply with the NZBC E2/AS1
- Flashing tape must have proven compatibility with the selected flexible underlay and other materials with which it comes into contact

Figure 27: Continuous cladding over floor joist

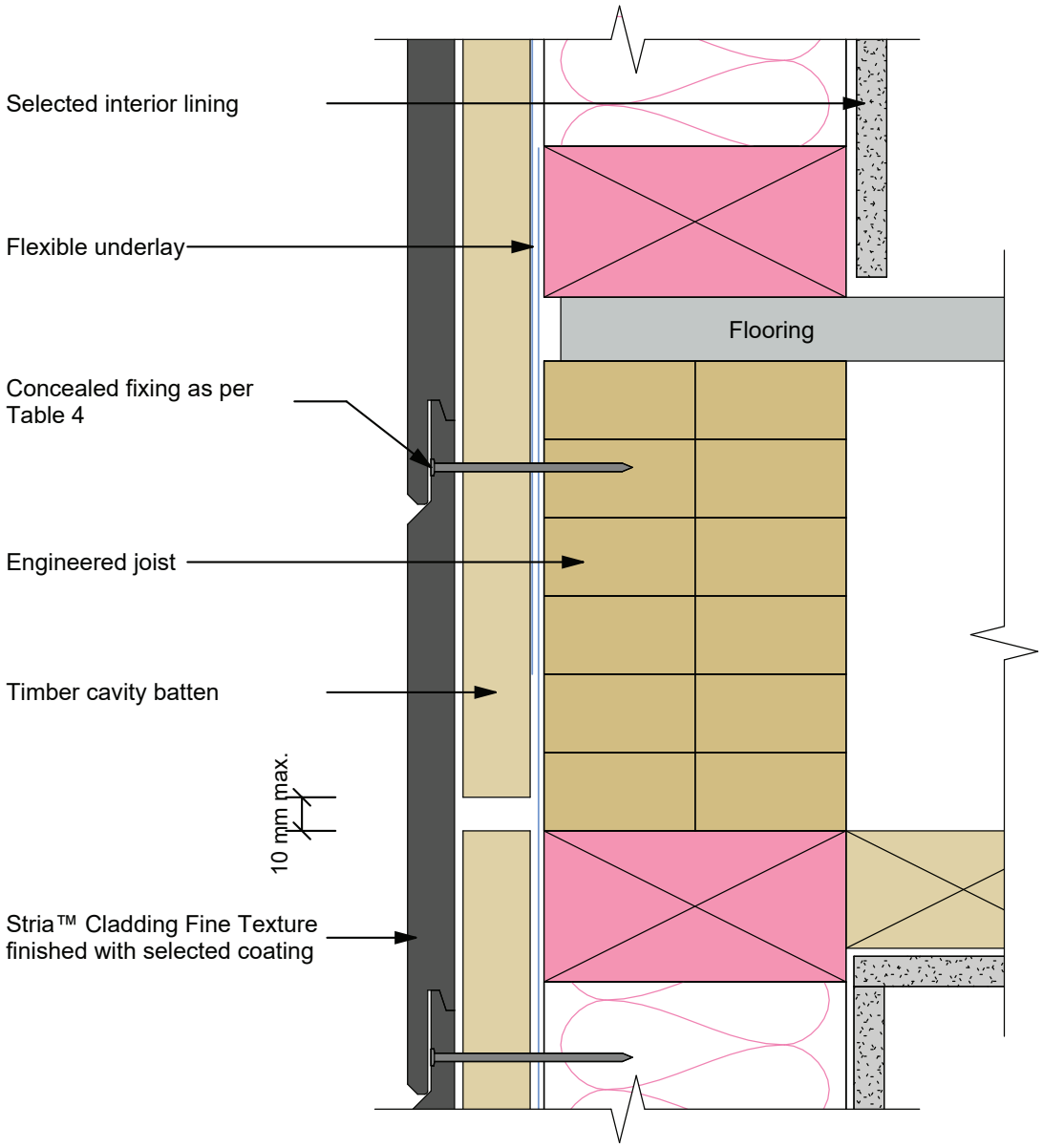

Figure 28: Trimline Horizontal joint at floor joist level

interactive assembly instructions available

http://wksp.nz/jh-str-fhmfl

Get **WORKING**SPEC from Apple App Store/Google Play

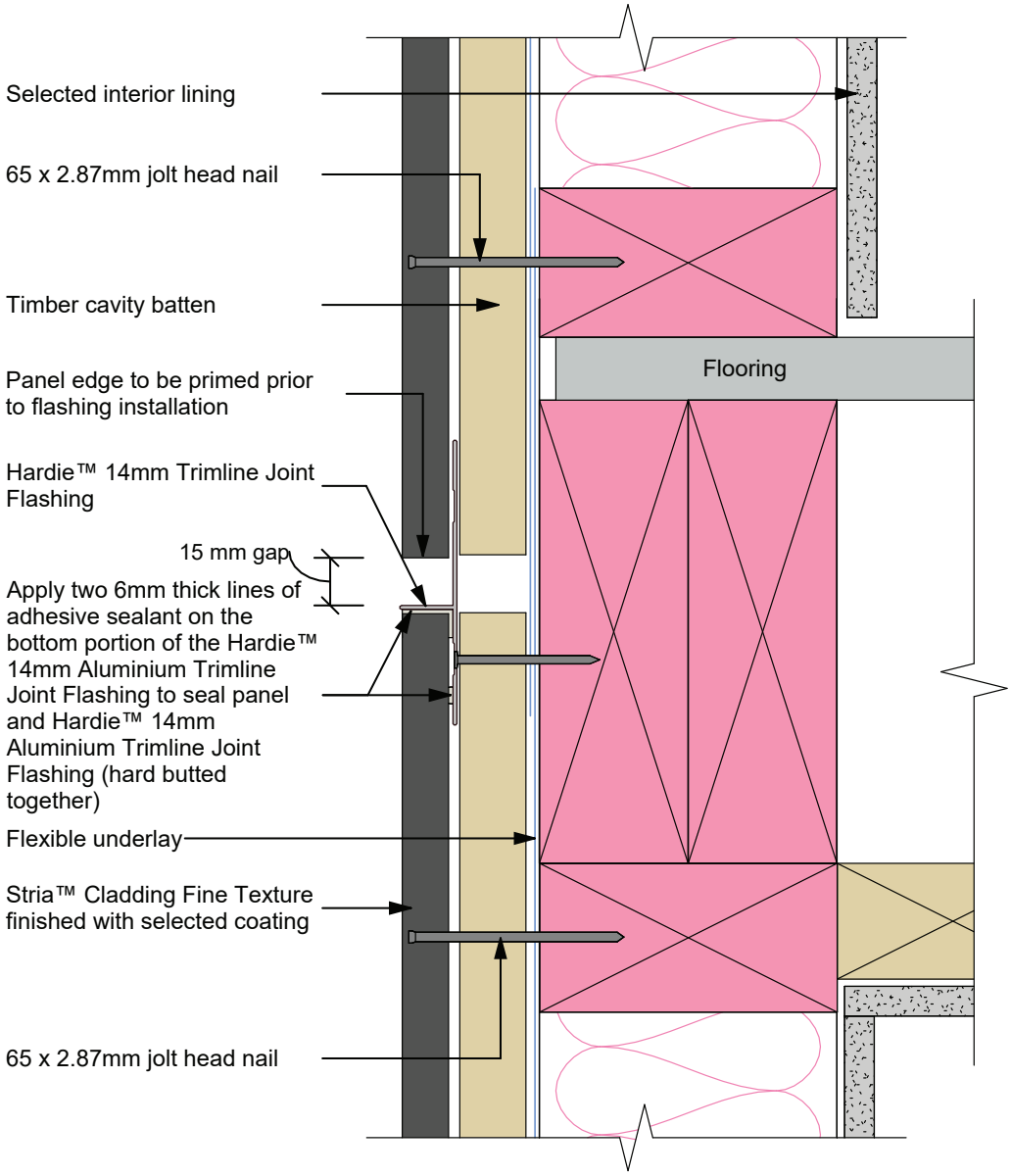

Notes:

- The butt joint in Hardie™ 14mm Aluminium Trimline Joint Flashing to be sealed using Trimline Horizontal 'L' shaped Jointer
- Site cut edges to be primed
- The flashing to be placed in the centre of the floor joists
- Do not fix cladding into floor joists

Figure 29: Trimline joint flashing below floor joists

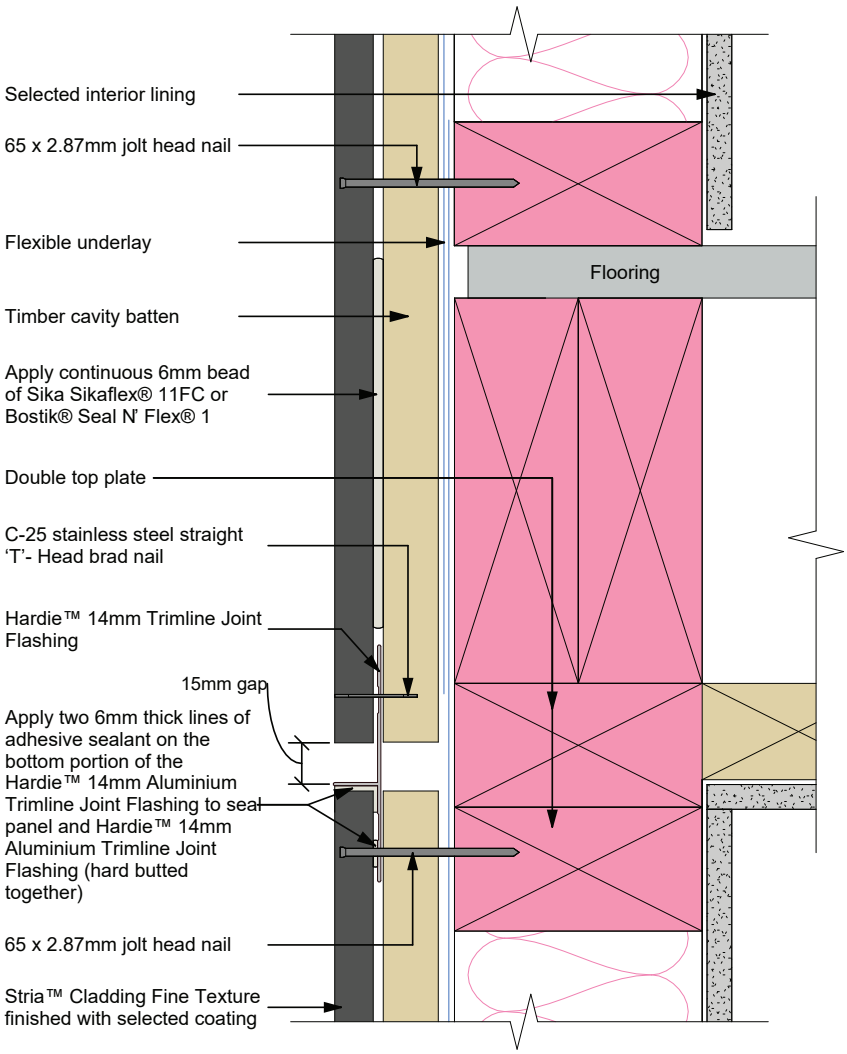

Notes:
- The butt joint in Hardie™ 14mm Aluminium Trimline Joint Flashing to be sealed using Trimline Horizontal 'L' shaped Jointer
- Site cut edges to be primed
- Check fixing centres and edge distances
- Do not fix cladding into floor joists

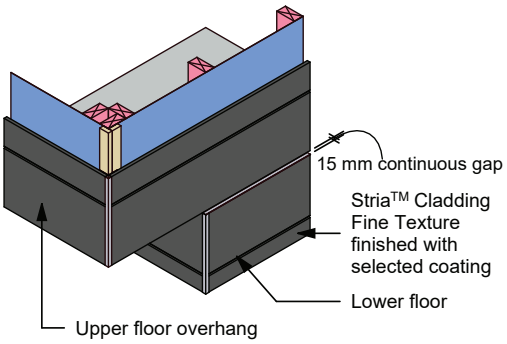

Figure 30: Trimline joint flashing

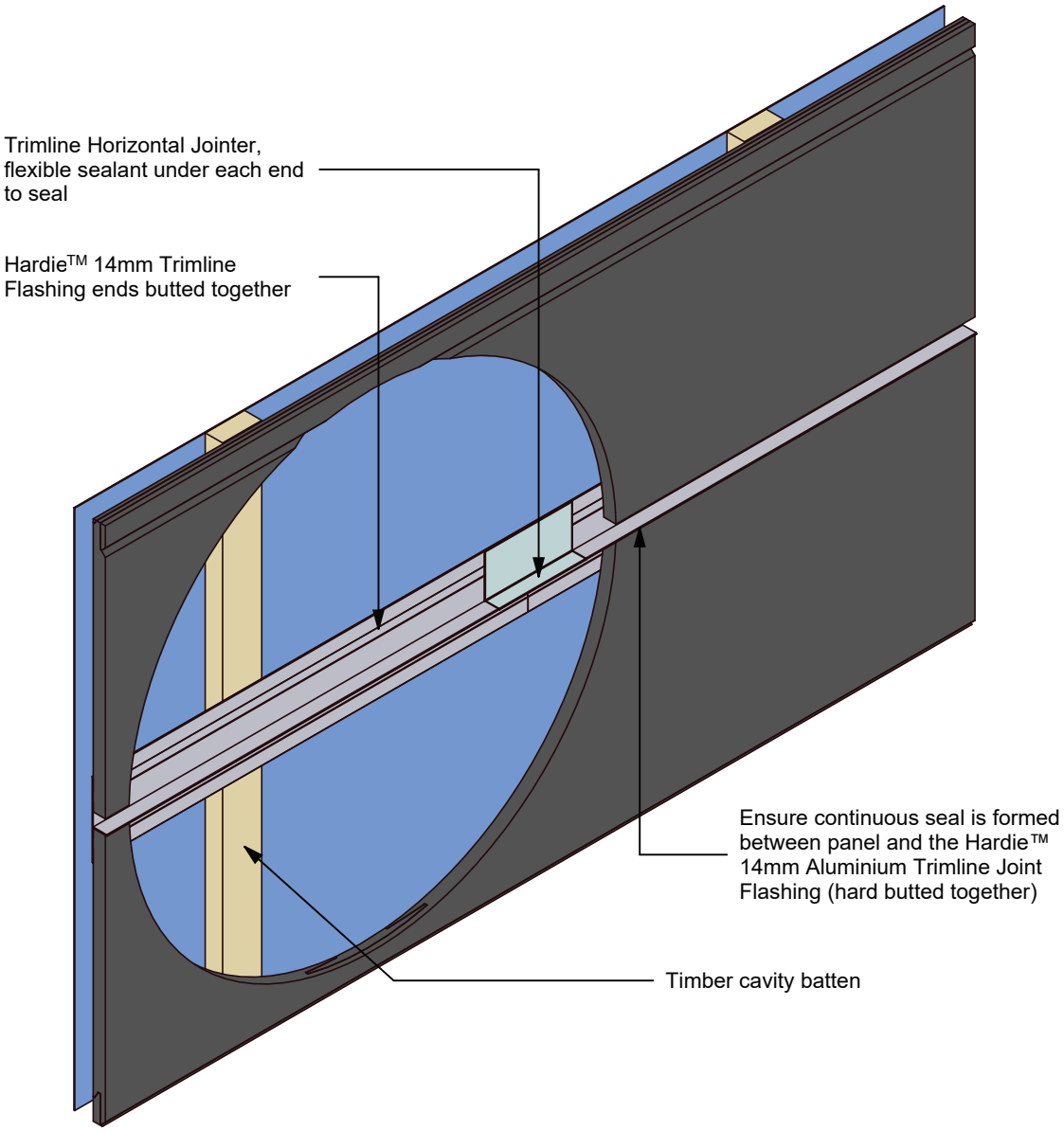

Figure 31: Trimline joint flashing at external corner - Option A

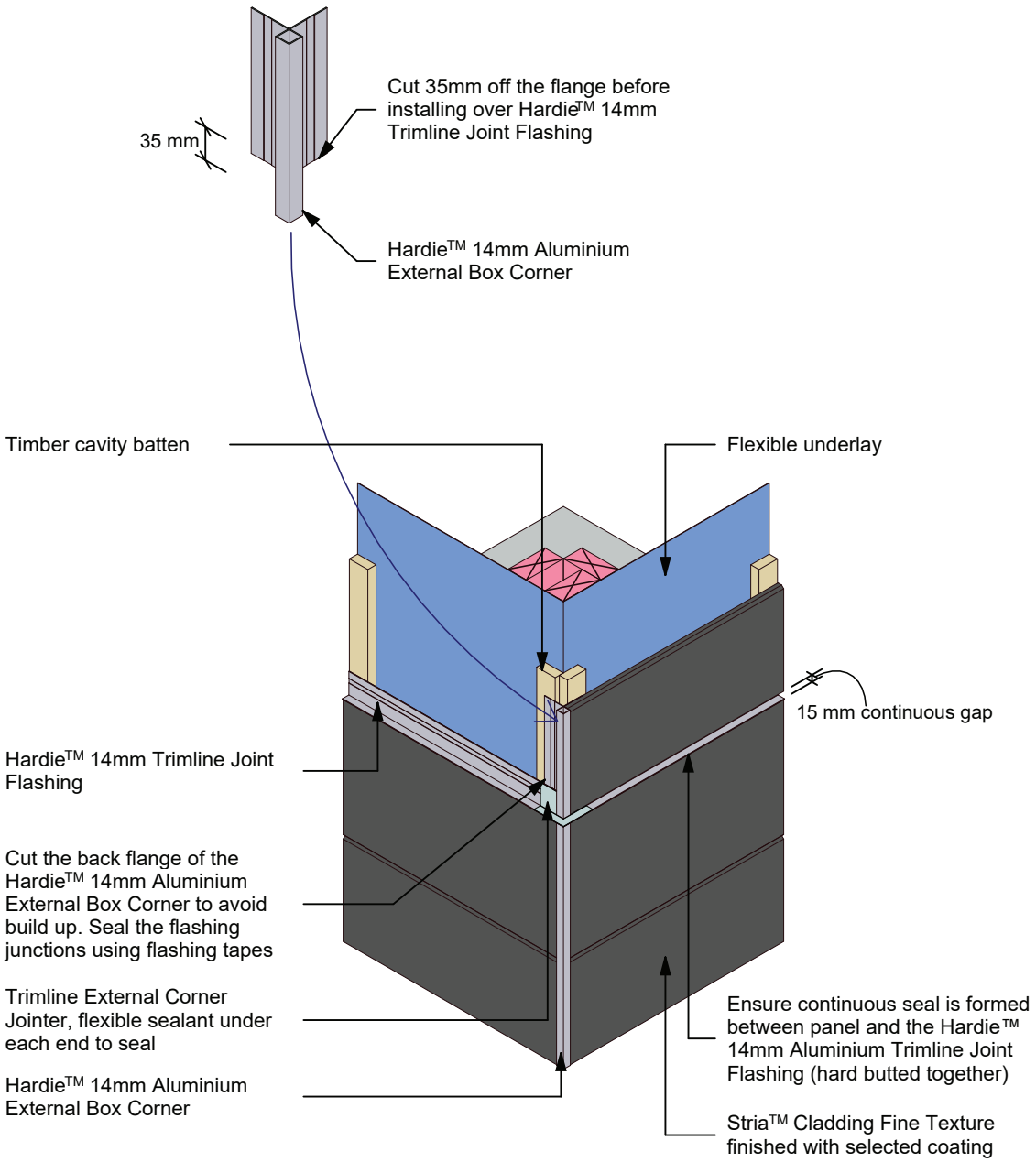

Note:
All site cut edges to be primed

Figure 32: Trimline joint flashing at external corner - Option B

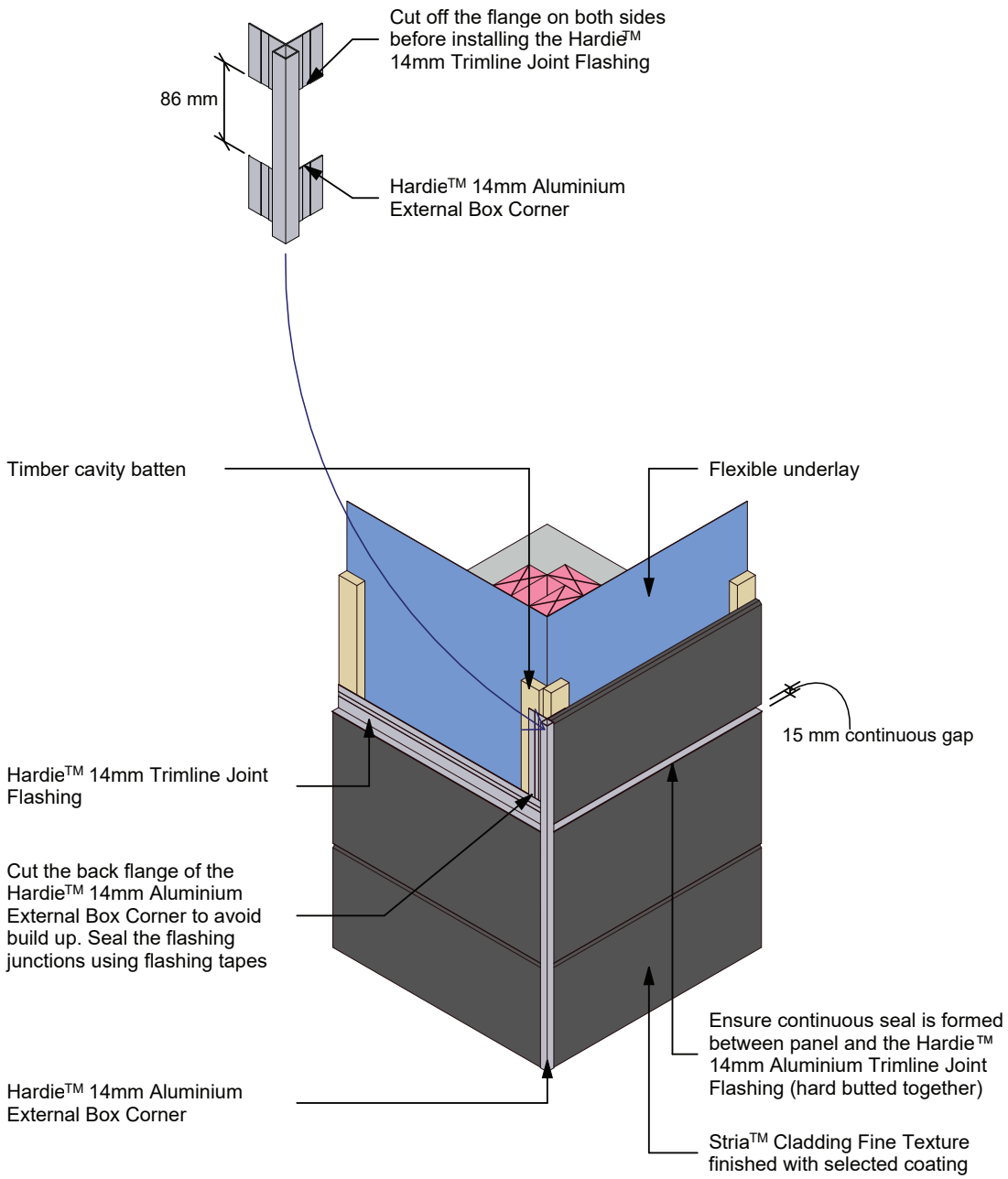

Note:
All site cut edges to be primed

Figure 33: Joining moulding

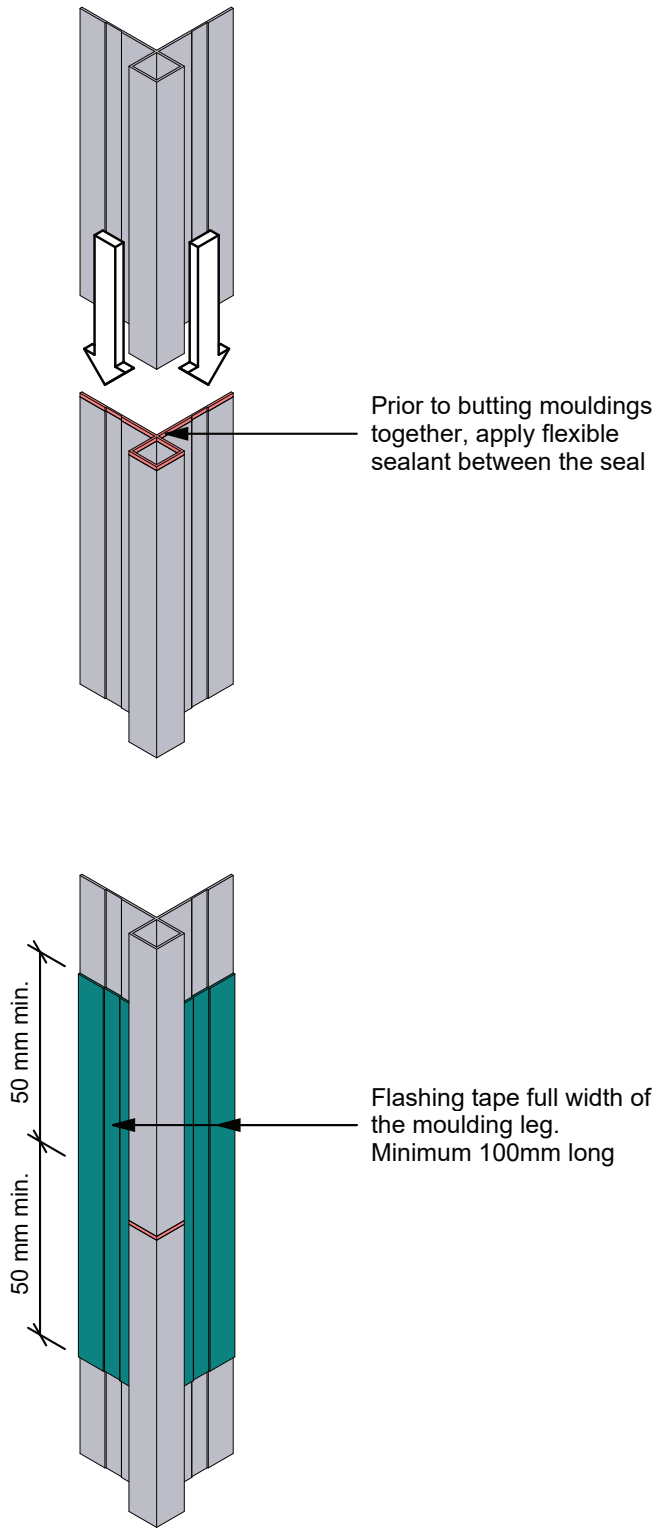

Figure 34: Trimline joint flashing at internal corner

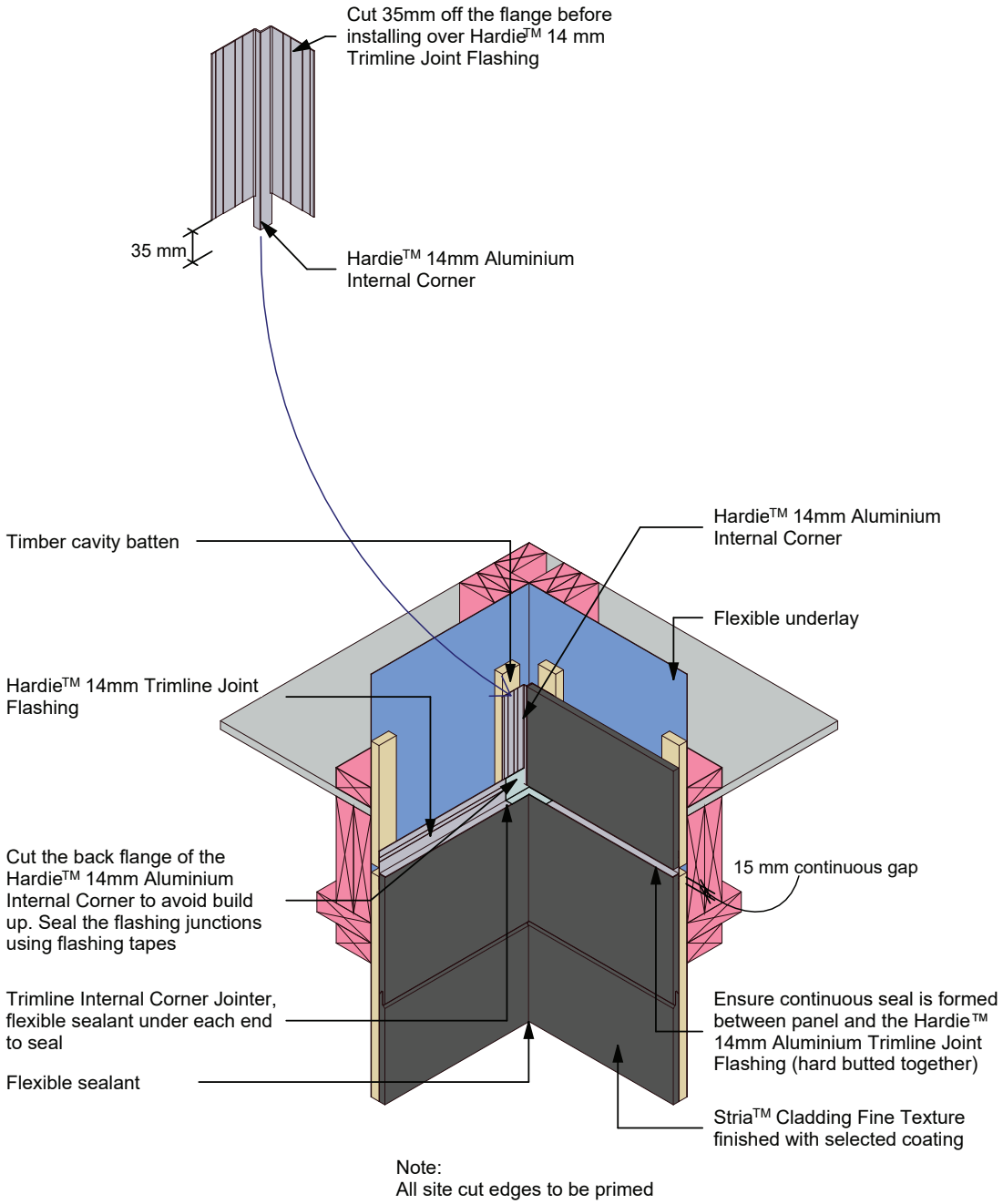

Note:
All site cut edges to be primed

Figure 35: Drained flashing joint at floor level

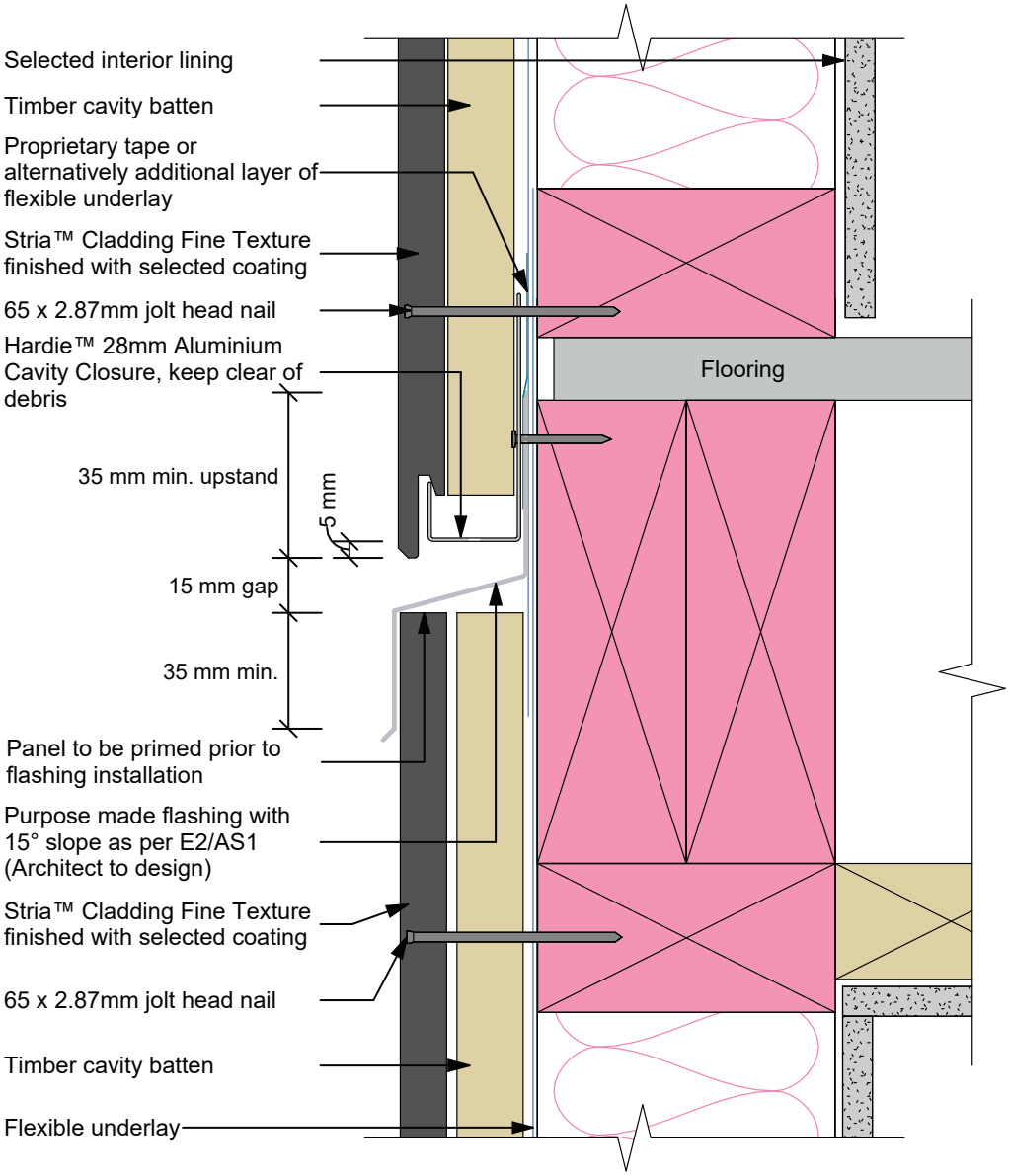

Notes:

- This detail is required to limit cavities to a maximum of 2 stories or 7 metres. Refer to E2/AS1 Paragraph 9.1.8.4
- Check architect's plans for the type of 'Z' flashing to be used
- Check fixing centres and edge distances
- Cut edges need to be primed
- The flashing to be placed in the centre of the floor joists. Do not fix timber cavity battens or cladding into floor joists

Figure 36: Drained flashing joint at external corner

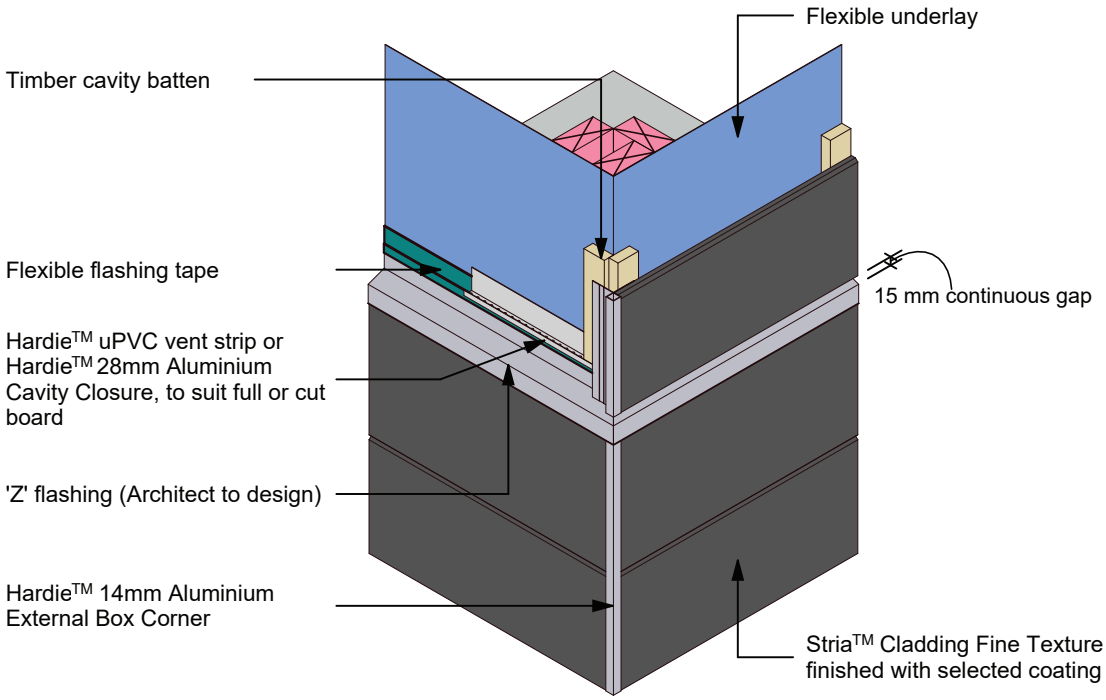

Note:
All site cut edges to be primed

Figure 37: Pipe penetration

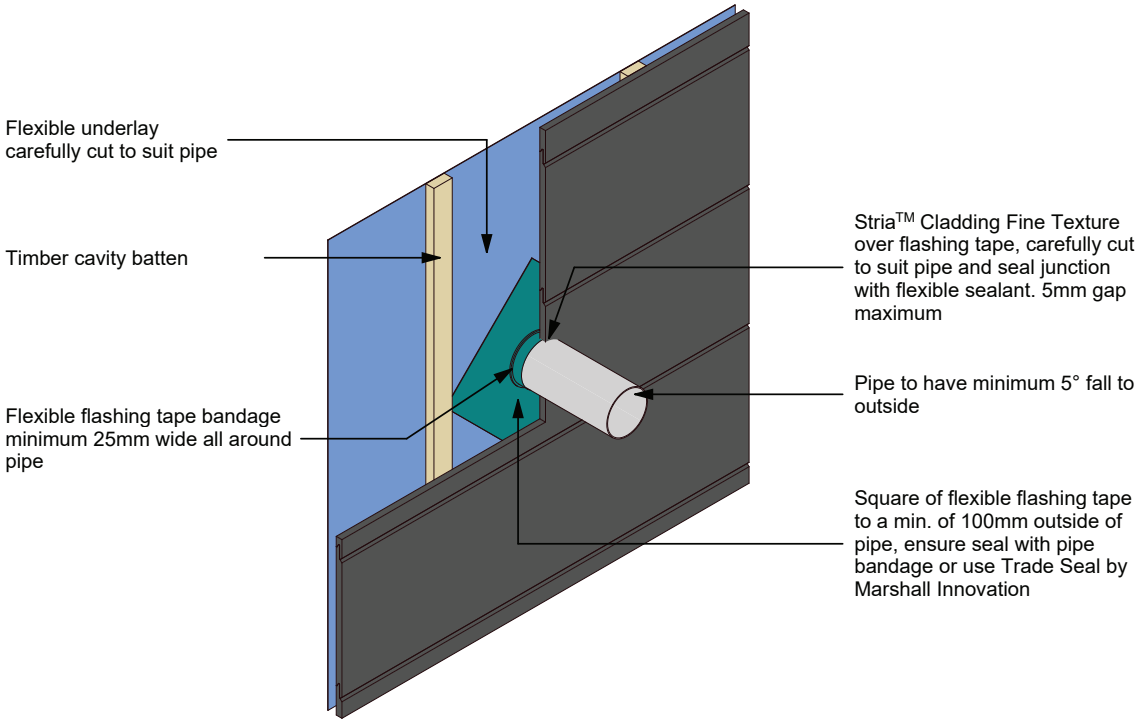

Note:
All site cut edges to be primed

Figure 38: Apron Flashing Detail

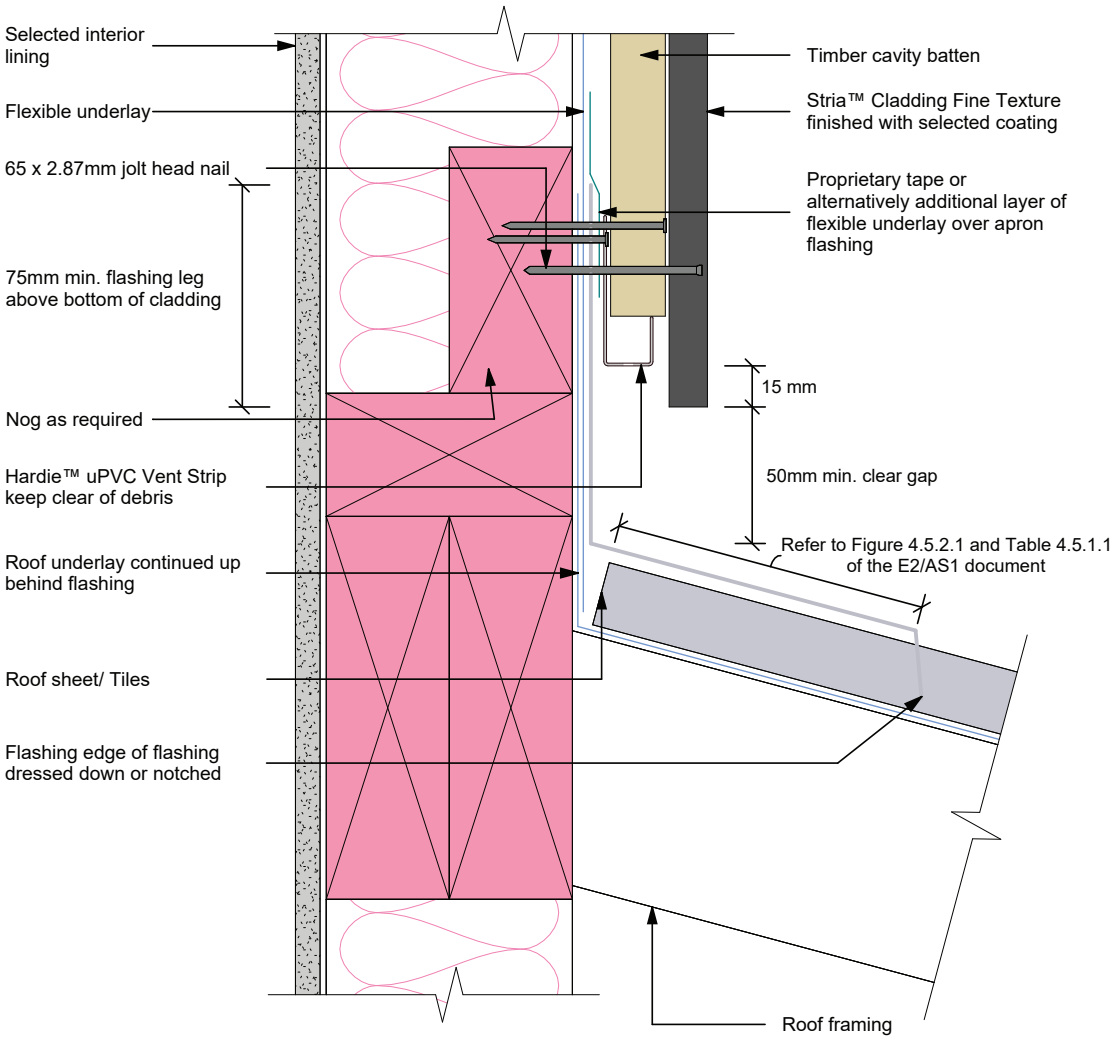

Notes:
- When 50 year durability for flashing is required refer to Table C.1.1.1A NZBC E2/AS1 document
- Site cut edges to be primed

Figure 39: Parapet flashing

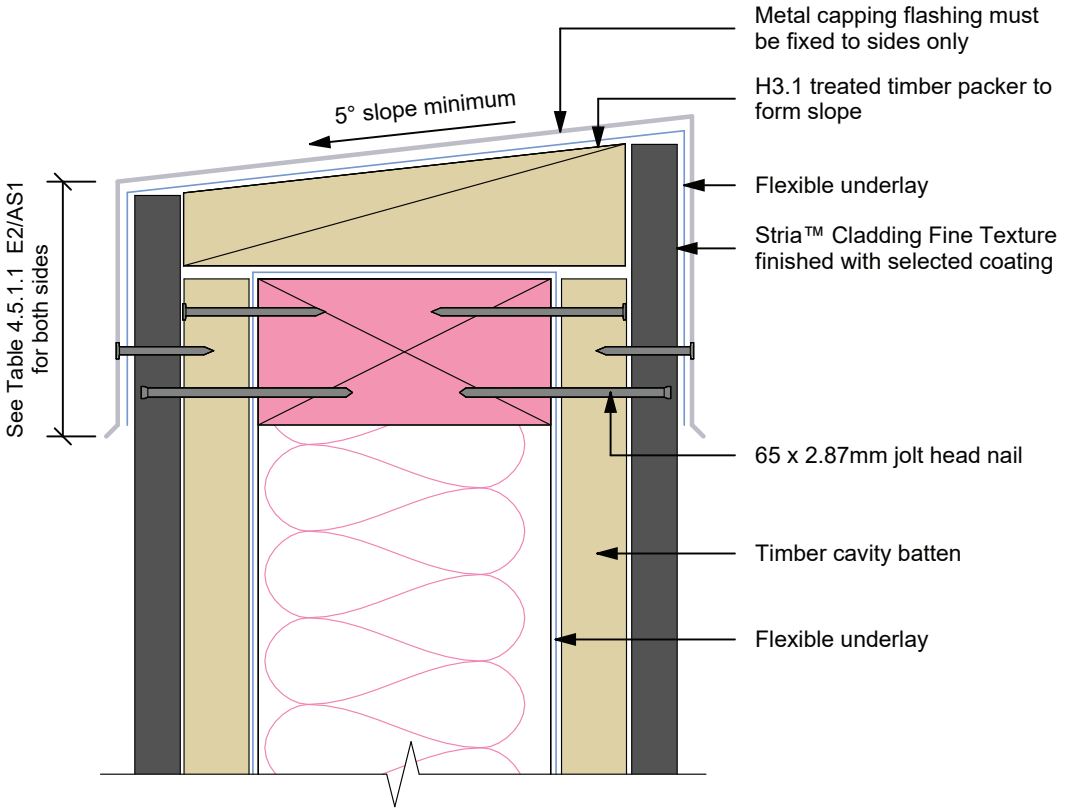

Figure 40: Enclosed deck balustrade to wall junction isometric

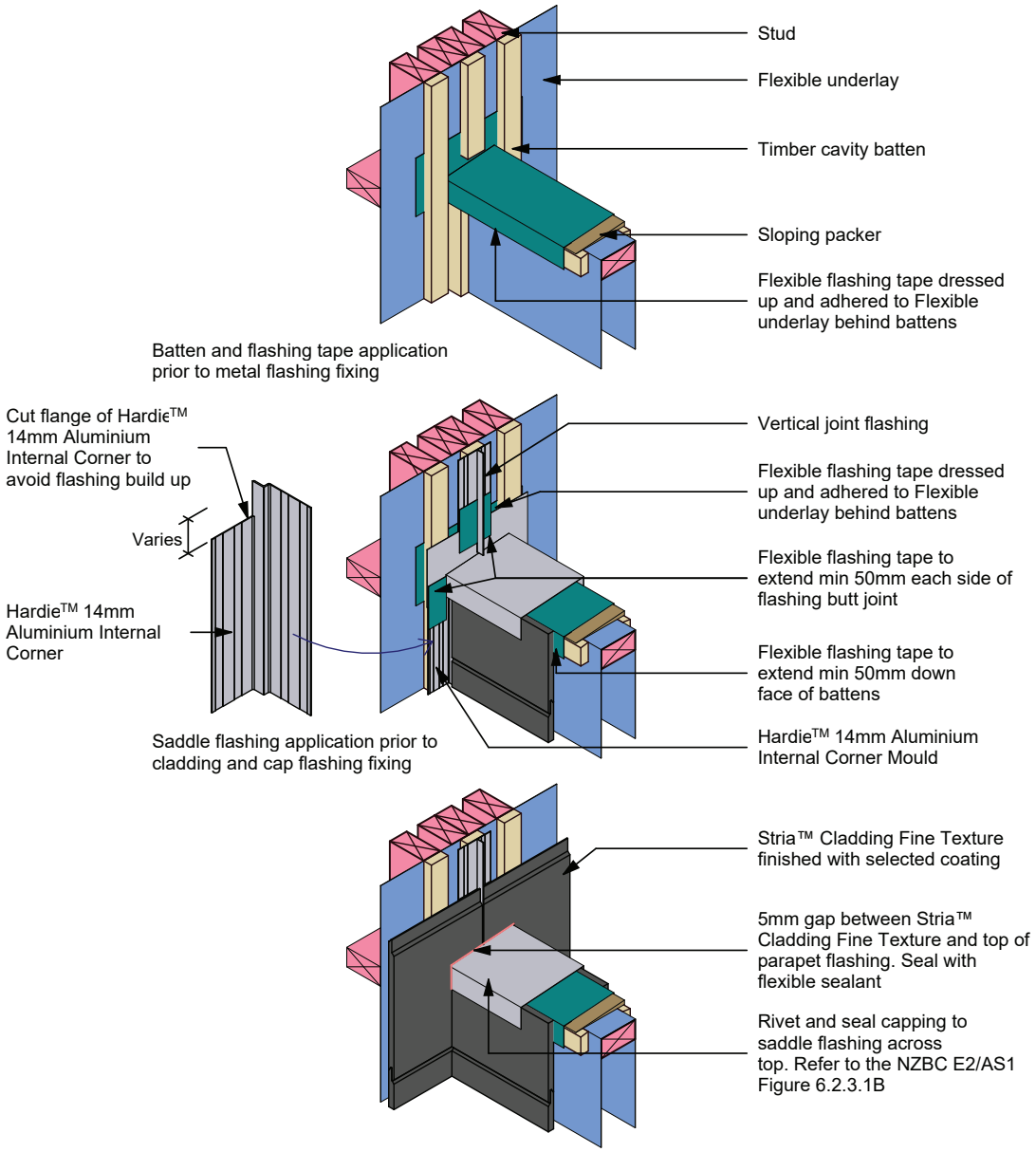

Figure 41: Roof to wall junction detail

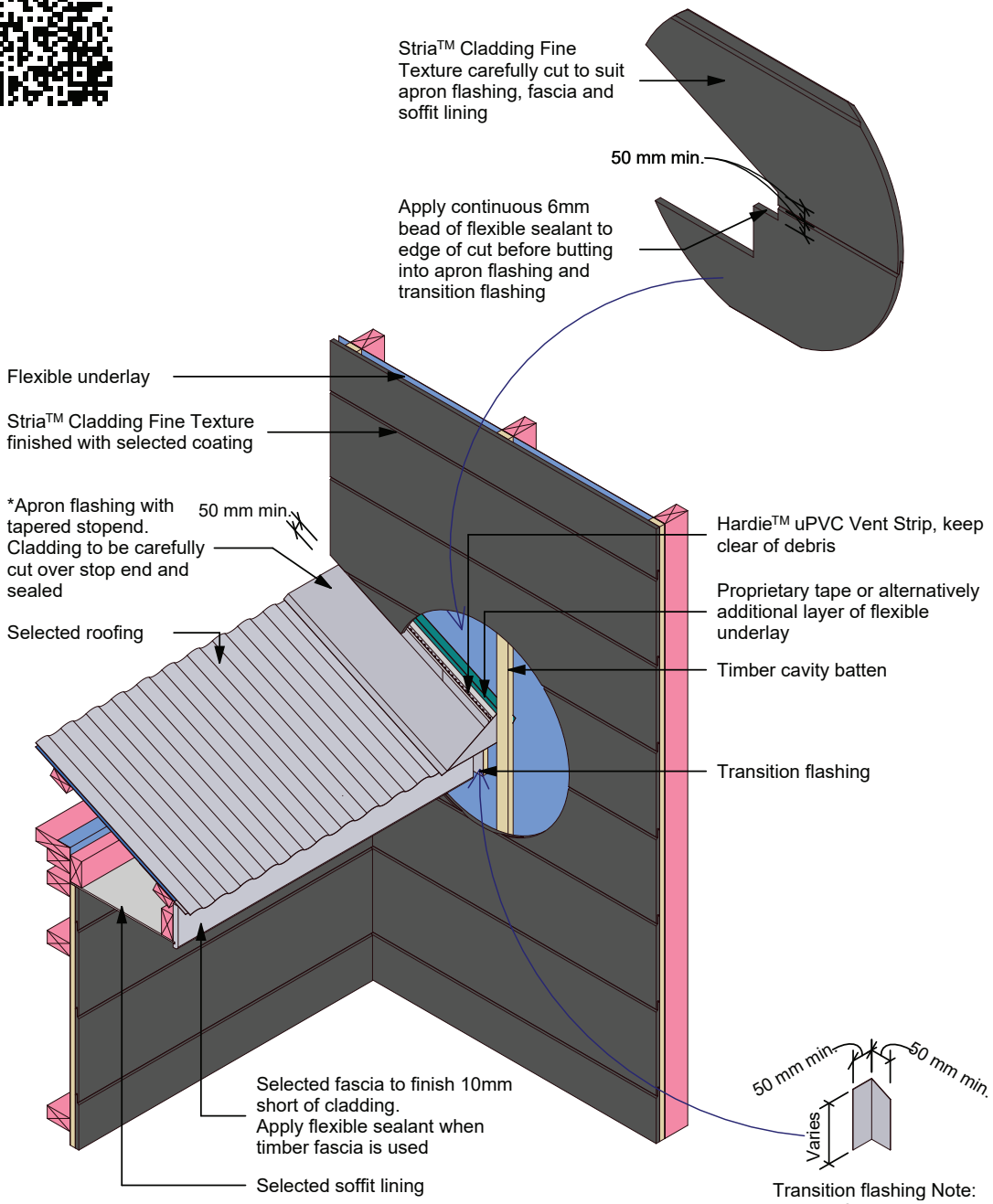

Transition flashing Note: Height of transition flashing from top of fascia to underside of soffit lining

Note:

- Site cut edges to be primed
- Spouting omitted for clarity. End of spouting must be 10mm minimum clear of finished Stria™ Cladding Fine Texture
- Stria™ Cladding Fine Texture to be primed prior to fascia installation

*When 50 year durability for flashing is required refer to Table C.1.1.1A of the NZBC E2/AS1 document

Figure 42: Garage door head

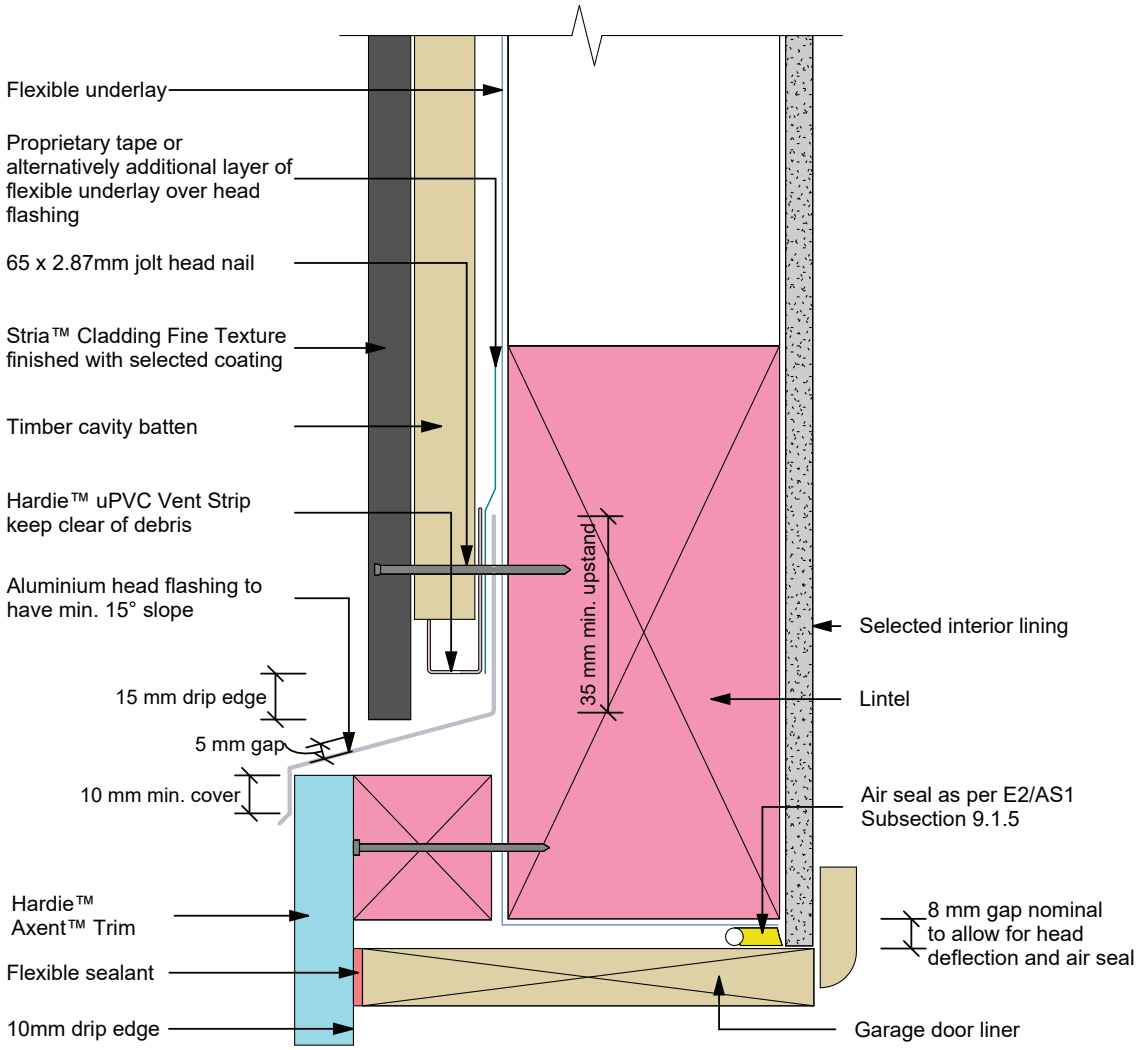

- Sealant must be applied between head flashing and Hardie™ Axent™ Trim in VH wind zone
- Site cut edges to be primed

For all meter box details please visit our website at **www.jameshardie.co.nz** or Ask James Hardie™ on **0800 808 868.**

Figure 43: Garage door jamb

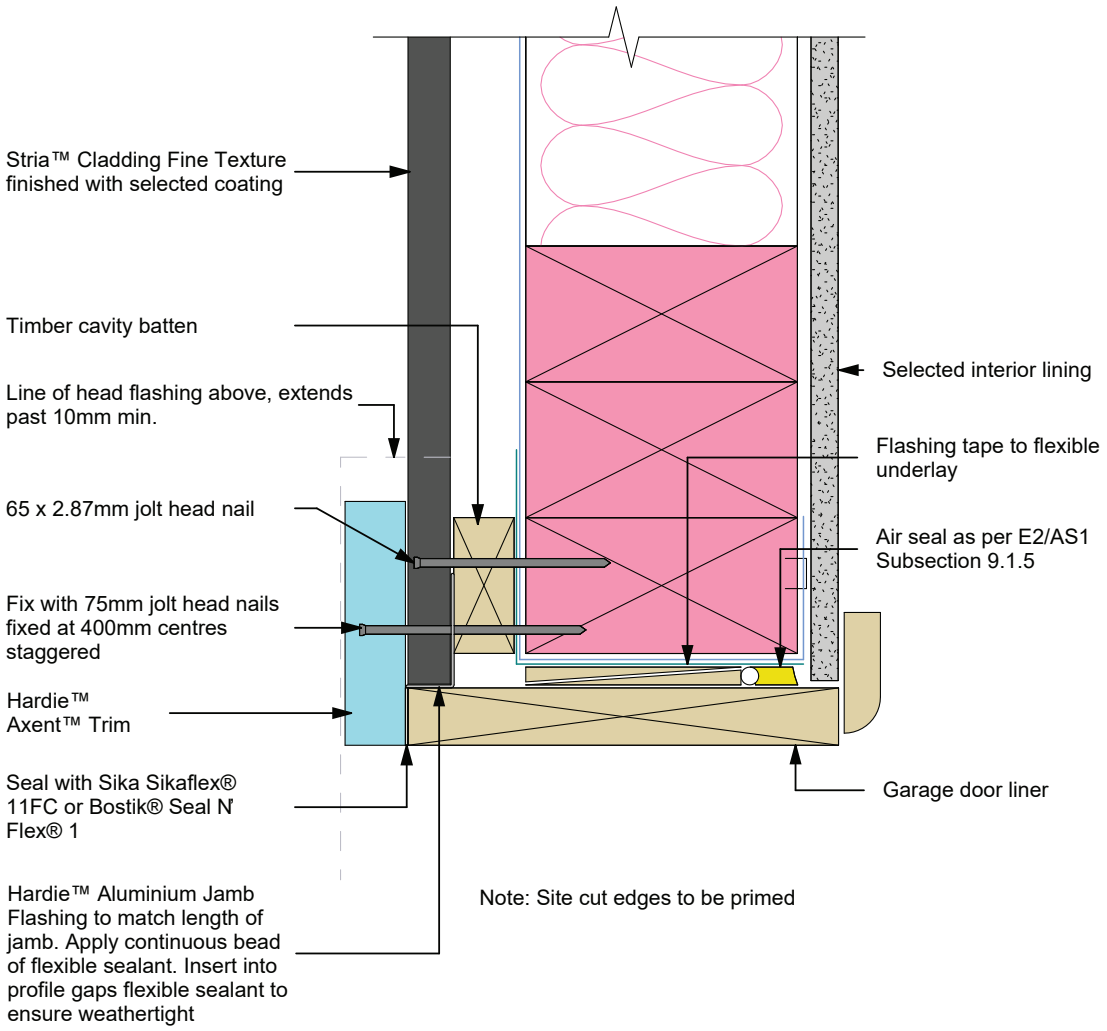

Figure 44: Cavity batten setout building height over 10m or different fire cells

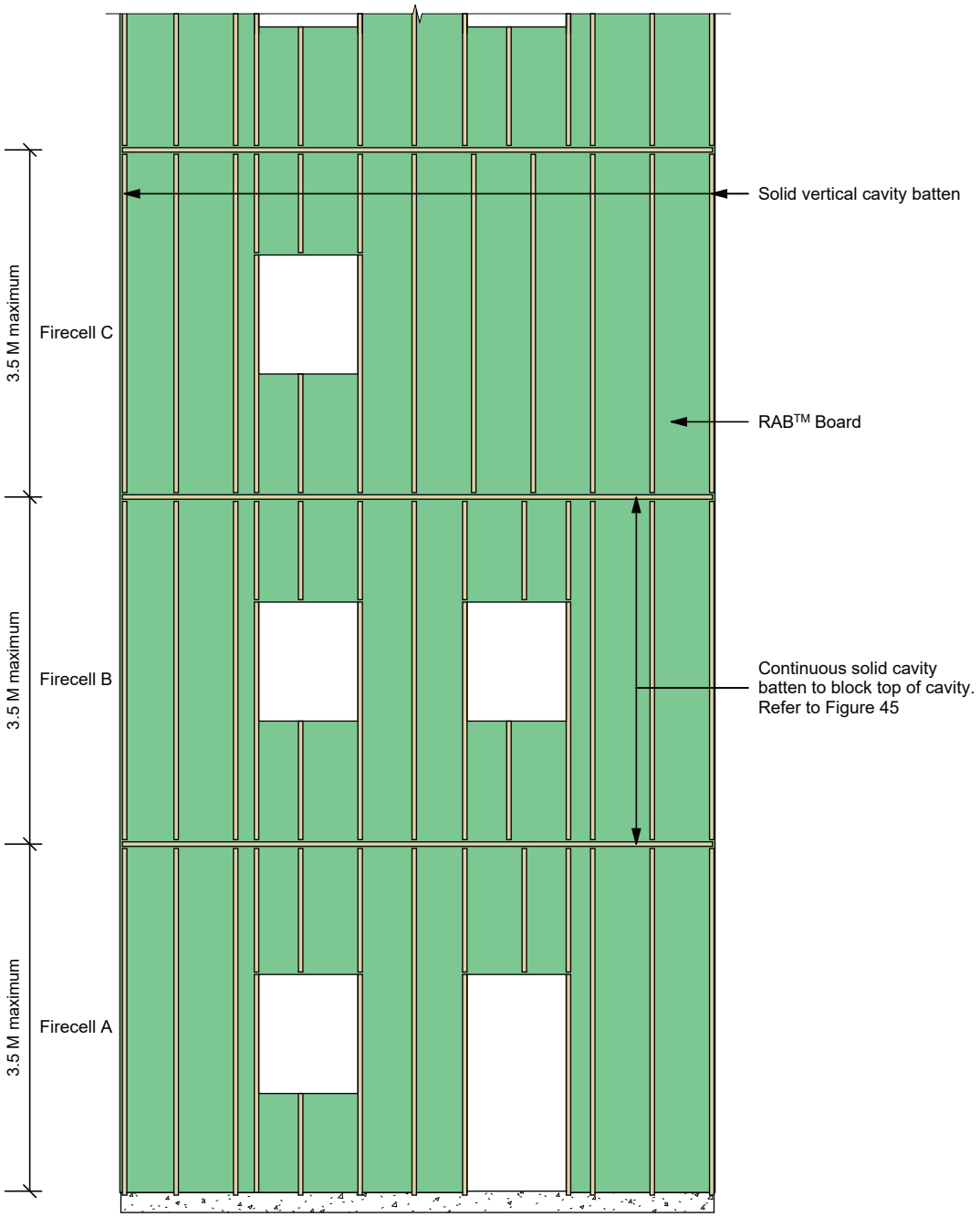

Figure 45: Cavity fire barrier for heights over 10m or different fire cells

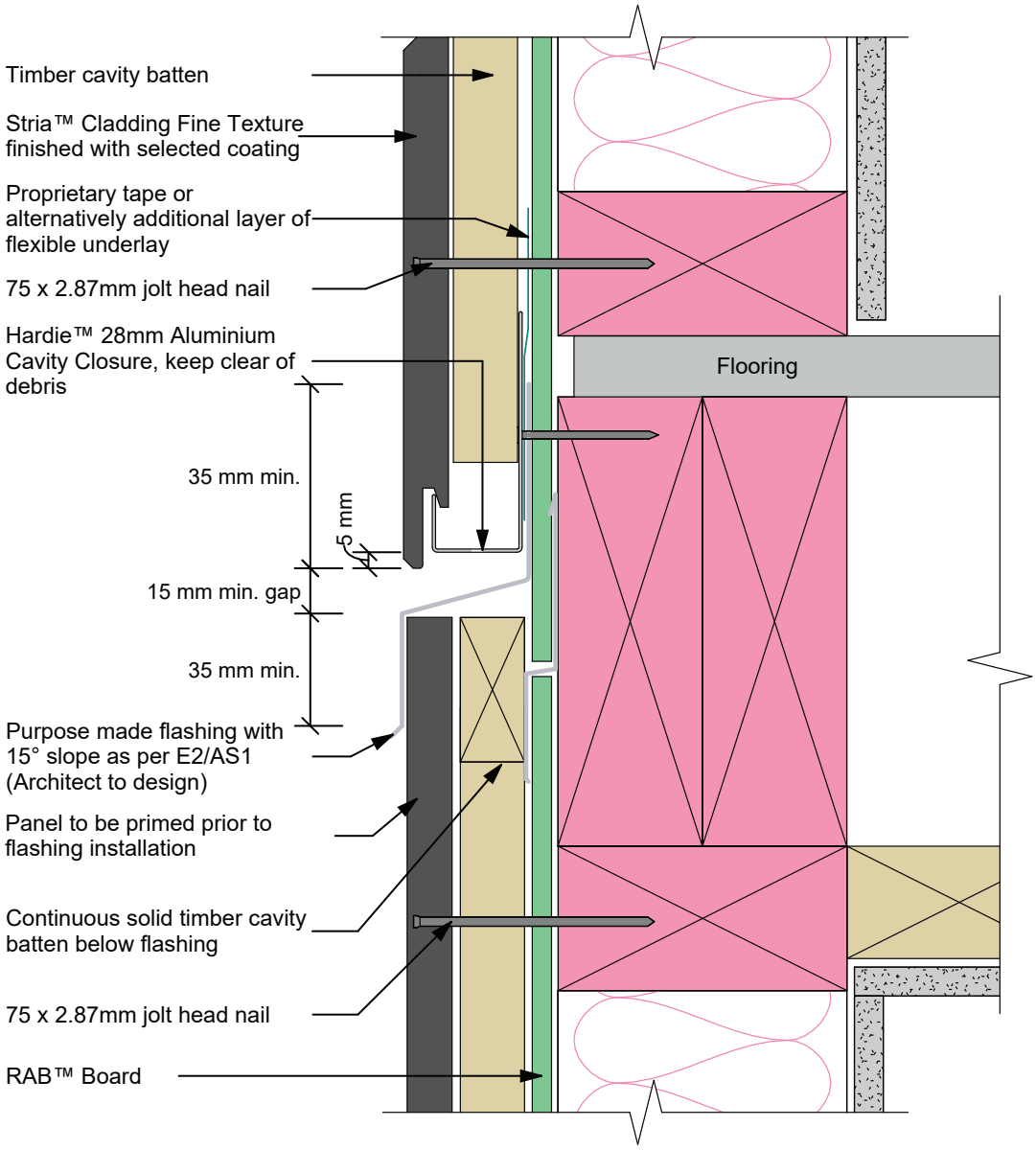

Note:

- This detail is required to limit cavities to a maximum of 2 stories or 7 metres. Refer to E2/AS1 Paragraph 9.1.8.4
- Check architect's plans for the type of flashing to be used
- Check fixing centres and edge distances
- Cut edges need to be primed
- The flashing to be placed in the centre of the floor joists. Do not fix timber cavity battens or cladding into floor joists

Product Warranty

NEW ZEALAND I Effective August 2024

This warranty is given by James Hardie New Zealand Limited ("James Hardie", "we", "its" and "us").

In this warranty:

- ***"Consumer"*** has the meaning given to it in the Consumer Guarantees Act;
- ***"Product"*** refers to the item listed below:

Stria™ Cladding

- ***"Technical Literature"*** means the Product specific installation guide published by James Hardie at the time of installation of the product (copies of the current installation instructions are available at jameshardie.co.nz or by calling Ask James Hardie™ on 0800 808 868); and
- ***"Warranty Period"*** means twenty five (25) years.

Warranty

1. Subject to the conditions and limitations set out below, we warrant that for the Warranty Period from the date of purchase, the Product will be free from defects due to defective factory workmanship or materials.
2. James Hardie further warrants that for a period of 15 years from the date of purchase of the Product that any associated accessories supplied by us will be free from defects due to defective factory workmanship or materials.
3. James Hardie warrants that at the time of manufacture the Product will comply with AS/NZS 2908.2:2000 Cellulose-cement products - Flat sheet.
4. This warranty is not transferable and is only provided to and may only be relied upon by:
   (a) the first purchaser of the Product or accessory from James Hardie; and
   (b) the last purchaser of the Product or accessory prior to installation.
5. If a breach of this warranty occurs, we will (at our option) either: supply replacement Product or accessory; rectify the affected Product or accessory; or pay for the reasonable and substantiated cost of the replacement or rectification of the affected Product or accessory.

Warranty Conditions

6. You may only claim under this warranty if:
   (a) the Product was installed and maintained strictly in accordance with the Technical Literature including the components or products specified or recommended in the Technical Literature; and
   (b) other products applied to or used in conjunction with the Product are applied or installed and maintained strictly in accordance with the relevant manufacturer's instructions and good trade practice; and
   (c) the Product is used in an application designed and constructed in strict compliance with all relevant provisions of the New Zealand Building Code (**"NZBC"**), applicable laws, regulations and standards; and
   (d) we are given reasonable opportunity to inspect the Product **before** any attempt is made to repair or remove the Product once it has been installed; and
   (e) the requirements for bringing a claim under the warranty as set out in clause 8 are complied with.
7. Subject to clauses 10 and 11:
   (a) to the fullest extent permitted by law, we exclude all:
      (i) other warranties, conditions, liabilities and obligations which may otherwise apply in respect of the purchase or use of the Product and/or its Technical Literature, other than those specified in this warranty; and
      (ii) liability for any loss or damage (whether direct or indirect) including property damage or personal injury, consequential loss, economic loss or loss of profits, the purchase or use of the Product and/or its Technical Literature whether arising in contract, tort (including negligence), statute or equity.
   (b) if or to the extent that it is not permitted by law to so limit our liability as set out in clause 7(a), then to the fullest extent permitted by law, we limit our liability at our option to:
      (i) the replacement of the Product or accessory or the supply of equivalent Product or accessory;
      (ii) the repair of the Product or accessory;
      (iii) the payment of the reasonable and substantiated cost of replacing the Product or accessory, or of acquiring equivalent Product or accessory; or
      (iv) the payment of the reasonable and substantiated cost of having the Product or accessory repaired;
   (c) this warranty does not cover defects which are not due to defective factory workmanship or materials, including but not limited to damage or defects caused by or arising from or attributable to:
      (i) use of the Product in applications not recommended by us or in accordance with the Technical Literature;
      (ii) the Product being subjected to abnormal treatment including impact, abrasion or mechanical action;
      (iii) surface marking, scratches or stains arising during or after the installation of the Product;
      (iv) poor workmanship or installation, poor design or detailing, settlement or structural movement and/or movement of materials to which the Product is attached;
      (v) incorrect design of the structure;
      (vi) acts of God including but not limited to earthquakes, fire, cyclones, floods or other severe weather conditions or unusual climatic conditions;
      (vii) efflorescence, normal wear and tear, growth of mould, mildew, fungi, bacteria, or any organism on any Product surfaces or Product (whether on the exposed or unexposed surfaces);

(viii) contact with chemicals such as solvents, detergents and pollutants, or exposure to a harsh chemical environment or an excessively salty environment;

(ix) use of adhesive tapes, sealants or mastics on the Product, or recoating of the surface of the Product outside of the recommended maintenance guidelines in the Technical Literature; or

(x) failure of third party coating systems, including but not limited to sealers and paints; and

(xi) **this warranty does not cover** any variation in the look of the Product including but not limited to: any variation in colour or surface pattern; any variation between different batches of the Product; or any variation against any sample material provided. The architect/builder/installer must ensure **prior to specification** that variation in look between items of Product is acceptable and ensure that each item of Product meets all aesthetic requirements **prior to installation.** Subject to the terms of this warranty, after installation of the Product, **we are not liable** for claims arising from aesthetic variations or defects if such variations or defects were, or would upon reasonable inspection have been, **apparent prior to installation.**

Making a Claim Under Warranty

If you are the property owner and did not purchase the product yourself, and you believe you have any issue with James Hardie product installed at your home, in the first instance you should contact the builder who purchased and installed the product. If you purchased the product yourself, you can make a claim under this warranty as detailed below.

8. In order to make a claim under this warranty, you must provide the following information in writing to us using the contact details below within 30 days after the alleged defect would have become reasonably apparent or, if the defect was reasonably apparent prior to installation, then the claim must be made prior to installation:

   (a) proof of purchase;

   (b) description of the defect and the issue;

   (c) photographs of the defect; and

   (d) your contact details.

9. Subject to New Zealand Consumer Law, you must bear any expenses you incur as a result of claiming under this warranty, except where you are entitled to recover such expenses under the New Zealand Consumer Law, in which case we will bear or otherwise reasonably compensate you for such expenses. All claims for such expenses are to be notified to us in writing within 21 days from the later of: when you make a claim under this warranty; or when we notify you that we, acting reasonably, accept responsibility for these expenses.

New Zealand Consumer Law

10. If you acquire the Product or accessories manufactured or supplied by us as a Consumer, that Product or accessories may come with guarantees that cannot be excluded under the Consumer Guarantees Act. If so, and we are a supplier, you are entitled to a replacement or refund for a failure of a substantial character or a failure that cannot be remedied, and compensation for any other reasonably foreseeable loss or damage. You are also entitled to have the goods repaired or replaced if the goods fail to be of acceptable quality or fail to meet some other guarantee and can be remedied and the failure is not of a substantial character. Where we or a related entity are the manufacturer, then you will have the rights set out in the Consumer Guarantees Act if the goods do not comply with this warranty or the consumer guarantees under the Consumer Guarantees Act.

11. Other than as lawfully excluded or limited by the other terms of this warranty, any rights a Consumer may have under this warranty are in addition to other rights and remedies of a Consumer under a law in relation to the goods to which this warranty relates. Nothing in this warranty shall exclude or modify any legal rights a purchaser and/or Consumer may have under the Consumer Guarantees Act, Fair Trading Act or otherwise which cannot be excluded or modified at law.

Disclaimer

The recommendations in James Hardie's literature are based on good building practice but are not an exhaustive statement of all relevant information. Further, as the successful performance of the relevant system depends on numerous factors outside the control of James Hardie (e.g. quality of workmanship and design) James Hardie shall not be liable for the recommendations made in that Technical Literature and the performance of the relevant system, including its suitability for any purpose or ability to satisfy the relevant provisions of the NZBC, laws, regulations and standards. It is the responsibility of the building designer to ensure that the details and recommendations provided in the relevant James Hardie Technical Literature are suitable for the intended project and that specific design is conducted where appropriate.

Our Contact Details

James Hardie New Zealand Limited

Address: 1 O'Rorke Road, Penrose, Auckland, 1061

Postal address: PO Box 12070, Penrose, Auckland 1642

Telephone: "Ask James Hardie™" on 0800 808 868

Website: www.jameshardie.co.nz

Email: info@jameshardie.co.nz

Notes

JamesHardie™

Ask James Hardie™ | Call 0800 808 868 | jameshardie.co.nz

© 2026. James Hardie New Zealand Limited. TM and ® denotes a Trademark or Registered Mark owned by James Hardie Technology Limited.
Dulux®, Protecto®, Bostik®, Thermakraft™, 3M™, Super-stick building tape®, Resene®, Sikaflex®, Seal N' Flex® 1, CRC®, ADOS® and Taubmans® are trademarks of their respective owners.